PREBLE-RISH INC
CONSULTING ENGINEERS & SURVEYORS

# ADDENDUM NO. 1

WAKULLA COUNTY

**DATE:** **January 23, 2014**

**TO:** **Prospective Bidders** **via individual e-mails**

**FROM:** **Alan Wise, P.E.**

**PROJECT NAME: Surf Road NRCS Drainage Improvements**

**PRI PROJECT NO: 203.108 --- Wakulla Co ITB #2014-03**

---

**ITEM NO. 1**

Please find the Responses to Questions from Bidders attached.

**ITEM NO. 2**

Please find the revised bid form attached.

**ITEM NO. 3**

Please find the Geotechnical Report attached.

**ITEM NO. 4**

Please find the revised Construction Plans attached.

Please acknowledge Receipt of Addendum via email and attach signed Receipt of Addendum to your bid

PREBLE-RISH INC
CONSULTING ENGINEERS & SURVEYORS

36 Jasper Thomas Road
Crawfordville, Florida 32327
(850) 997-2175

# RECEIPT OF ADDENDUM

**RE:** Surf Road NRCS Drainage Improvements

**PREBLE-RISH, INC. PROJECT NO.** 203.108

**Addendum No. 1**

I_____with _____
(Print Name) (Company Name)

Received **Addendum No. 1**

on _____.
(Date)

_____
(Signature)

**Surf Rd. NRCS Drainage Improvements**
**Questions & Answers – FINAL LIST**
**ITB #2014-03**

Q. What is the budget amount for this project?

***A. $200,000.***

Q. Table of Contents page indicates that a soils report is attached to the bid documents but I cannot locate one. Can you please send the report?

***A. The Geotechnical Report will be included in a forthcoming addendum.***

Q. Plan Pg. S7 – Sheet Pile Coating Plan: This plan sheet indicates coating but does not indicate the product required. I cannot find the specification for the coating in the bid documents. Can you supply the specification for the coating?

***A. The coating is required to be 12-14 mil of epoxy coal tar or poly-urea as manufacutured by Krylon or Rust-o-leum. Touch up or field applied coating is required to be 2-10 mil coats of the specified coating.***

Q. Guardrail – please advise of the offset from centerline between the section on the concrete and that abutting the sheet pile wall.

***A. Guardrail shall be placed in accordance with FDOT specifications as shown, a minimum of 10' from the edge of travel lane.***

WAKULLA
COUNTY

Q. What are the min and max flows in CFS/GPM of the creek.

***A. Flow rates are not available. The minimum and maximum elevations vary seasonally from -2 to 7.5.***

Q. Sheet S2 - shows CZ 72 sheeting while sheets S-4 and S-5 show CZ67. Which is correct?

***A. CZ 67 is the required sheet pile. Please see the revised plans.***

Q. Sheet S-4 – The tie to the whaler along the 12'-7" section of sheet next to the existing box culvert. Shouldn't this be continuous to keep the sheets straight?

***A. The 12'-7" section in question is supported at the top by the pre-cast concrete deck and does not require a waler or tie back system.***

Q. Sheet S-3 – Section A-A shows an HP 12x63 cap while B-B shows an HP 10x57. Please advise which is correct.

***A. The proposed pile cap is required to be HP 10x57. Please see the revised plans.***

Q. Sheet S-2/S-3- It appears that a beam is necessary to span both the left and right 34 foot section s of piles under the parapet wall. This is for both the vertical and battered piles. Which beam size is appropriate? This would constitute approximately 136 additional feet of cap.

***A. There are no s-piles proposed under the parapet wall.***

WAKULLA
COUNTY

Q. Sheet S-5 – shows a WT 15x58 whaler, Sheet S-6 shows a C7x9.8 Channel, is one or the other or both required?

***A. The proposed waler is required to WT 15x58. Please see the revised plans.***

Q. S-6 – 3”x5”x3 ¼” Plate – is this continuous for the length of the C channel assuming the above or not necessary with a T plate WT 15x58?

***A. The proposed waler is a WT 15x58, therefore this is not applicable.***

Q. How is the 600 LF of pile accounted for and how long do they need to be?. There appears to be 28 piles, 18 vertical, 10 battered.

***A. The project consists of 4 vertical piles, 4 battered piles, plus 4 pile caps. Please see Sheet C4.***

Q. Sheet S-2; S-3; S-4 – Requirement of 88 KIP on the Helical Anchors has to be achieved in 20 feet or the opposing anchors will hit each other or penetrate the others zone of influence. Please advise as this seems very short for the resistance required.

***A. As an option, the contractor may choose to bore a solid rod under the roadway that can be connected to the wall/waler on the opposing side of the roadway. Minimum working loads as shown are required to be met.***

Q. What is the load bearing of the piles and the driving depth?

***A. The existing soils data suggests that a 70’ pile length will suffice. A test pile will be required (see revised structural notes). Pile capacity is 15 tons axial service load, 30 ton ultimate capacity.***

## BID SCHEDULE

### CALENDAR OF EVENTS

All times listed in Calendar of Events are Eastern Daylight Time.

| EVENT | DATE & LOCATION |
|---|---|
| ITB Released and Advertised | January 1, 2014 |
| **NO PRE-BID MEETING WILL BE HELD FOR THIS PROJECT** | |
| Technical Questions Due from Prospective Respondents | January 16, 2014 |
| Responses to Technical Questions Posted | January 21, 2014 |
| **Bids Due and Opened (NO FAX ACCEPTED)** | **January 29, 2014 @ 11:00 a.m.** |
| Posting of Intended Award | February 3, 2014 |
| Anticipated Start Date | Upon Issuance of Notice to Proceed |

Bid Format/Schedule:

Payment for the various items of the Bid Schedule shall include all compensation for furnishing tools, equipment, supplies, and manufactured articles, labor operations, permit fees, licenses, taxes, insurances, bonds, overhead and profit, and incidentals appurtenances thereto, and including all costs of compliance with the regulations of public agencies having jurisdiction, including the Occupational Safety and Health Administration of the US Department of Labor (OSHA), FDEP, SFWMD, and Wakulla County Health Department. No separate payment will be made for any item that is not specifically set forth in the Bid Schedule, and all costs therefore shall be included in the prices named in the Schedule for the various appurtenant items of work.

The bidder shall submit a bid on all items or the bid shall be considered irregular. The County reserves the right to accept or reject the bid. The County further reserves the unqualified right to determine whether any particular item or items or materials, equipment, or whatsoever is an approved equal, and reserves the unqualified right to a final decision regarding the approval or rejection of the same.

The Bidder shall perform with his own organization, work amounting to not less than fifty percent (50%) of the total contract amount, less the total amount for those contract items designed as specialty work.

| | | | | |
|---|---|---|---|---|
| Note: | LF = Linear Foot | LS = Lump Sum | PS = Per Set | NM= Nominal Mile |
| | LB = Pounds | CY = Cubic Yard | TN= Ton | |
| | EA = Each | SY = Square Yard | GM= Gross Mile | |

1

| PAY ITEM NUMBER | DESCRIPTION | UNIT | QTY | UNIT PRICE | COST |
|---|---|---|---|---|---|
| **GENERAL COSTS** | | | | | |
| 1.1 | MOBILIZATION | LS | 1.00 | | |
| 1.2 | MAINTENANCE OF TRAFFIC | LS | 1.00 | | |
| 1.3 | CONTRACTORS EROSION CONTROL | LS | 1.00 | | |
| 1.4 | BONDS AND INSURANCE | LS | 1.00 | | |
| **DRAINAGE** | | | | | |
| 2.1 | ASBUILTS, SURVEY, AND LAYOUT | LS | 1 | | |
| 2.2 | DEWATERING | LS | 1 | | |
| 2.3 | GRADING AND SHAPING | SY | 1100 | | |
| 2.4 | RUBBLE RIPRAP, CLASS II | SY | 350 | | |
| 2.5 | SOD | SY | 700 | | |
| 2.6 | DEMO / CLEARING AND GRUBBING | CY | 140 | | |
| 2.7 | EARTHFILL | CY | 900 | | |
| **STRUCTURE** | | | | | |
| 3.1 | PILE DRIVING SET UP AND PDA TESTING | LS | 1 | | |
| 3.2 | STL SHEET PILE WALL, CZ 67 (incld. tie back system) | LF | 160 | | |
| 3.3 | CONC. WALL CAP, (for sheet pile wall) | LF | 108 | | |
| 3.4 | STL PILING, HP 10x57 | LF | 600 | | |
| 3.5 | STL PILE CAP, HP 10X57 | LF | 32 | | |
| 3.6 | CONC. DECK SLAB | SF | 480 | | |
| 3.7 | CONC. PARAPET WALL | LF | 60 | | |
| 3.8 | GUARDRAIL | LF | 310 | | |
| 3.9 | GUARDRAIL, STRAIGHT END SECTION | EA | 4 | | |
| **TOTAL** | | | | | |

Tallahassee Office

870 Blountstown Highway, Suite 3
Tallahassee, FL 32304

Tel: (850) 576-4652
Fax: (850) 576-4710
www.soearth.com

*FL Certificate of Authorization #3737*

SOUTHERN EARTH SCIENCES, INC.

*Geotechnical, Environmental & Construction Materials Testing*

Preble-Rish, Inc.
36 Jasper Thomas Road
Crawfordville, Florida 32327

November 26, 2013
File No.: T13-181

**ATTENTION:** Mr. Alan Wise, P.E.

**SUBJECT:** Report of Subsurface Investigation
Proposed Surf Road Box Culvert Extension – Sopchoppy, Florida.

Dear Mr. Wise:

As requested, Southern Earth Sciences, Inc. (SESI) has completed the subsurface investigation for the above referenced project in Sopchoppy, Wakulla County, Florida in general accordance with Prop. No.: PT-3286 dated October 25, 2013. This report describes our field testing techniques and includes data obtained during the investigation.

## SITE AND PROJECT INFORMATION

The project site is located approximately 1.25 miles southeast of Highway 319 on Surf Road at Buckhorn Creek in Sopchoppy, Florida. At the time of our investigation, we understood that the culvert was to be extended 12 feet on each side of the road. However, based upon preliminary findings, we understand that a pile supported bridge deck may be constructed instead.

## FIELD INVESTIGATIVE PROCEDURES

On November 4 and 16, 2013, personnel with our firm traveled to the project site and completed the field testing for the above referenced project. For our geotechnical investigation, four (4) cone soundings were performed to depths ranging from about 26 to 30 feet below the existing ground surface. The cone penetrometer is track-mounted and rather than sampling at 5 foot intervals, as normally done with SPT borings, the cone penetrometer is an electronic device that provides continuous evaluation of the soils' bearing capacity through point and frictional resistances. The cone penetrometer is hydraulically pushed into the soil with point and frictional resistances obtained continuously. This testing equipment provides a more accurate definition of the soil

strength characteristics and the changes in stratification than the more traditional SPT borings. Cone soundings were performed in general accordance with ASTM D 5778.

To verify soils types predicted by our cone soundings, four (4) Macro-Core borings were performed to a depth of 25 feet below the existing ground surface. The Macro-Core system is a closed-piston sampler, with an inner piston rod and outer drive casing, and is driven to the top of the sampling interval. The inner piston rod is removed and the Macro-Core sampler is driven to collect a soil sample. The soil sample is collected in a clear 5-foot PVC liner and is delivered back to our laboratory for soil classifications and laboratory testing. Log of Boring sheets are attached showing the soil types encountered.

We also obtained two (2) samples of the creek bottom materials and performed some probing of the proposed box culvert area. This testing was performed by mobilizing a canoe to the site on November 16, 2013. Results of this testing will be discussed later in this report.

Test locations were established in the field with reference to the existing structure; therefore, our test locations should be considered approximate. See the attached Figure 1 for our approximate test locations.

## LABORATORY TESTING PROCEDURES

Laboratory investigative work consisted of physical examination of samples obtained during the soil test borings operation. Soil samples were visually classified in the laboratory in accordance with the Unified Soil Classification System. Evaluations of these samples, in conjunction with penetration resistances, have been used to estimate soil characteristics.

Natural Moisture Determinations: Four (4) samples were selected for the determination of their natural moisture content. In the laboratory, each sample was weighed, dried, and its moisture content computed in accordance with ASTM D 2216.

Percent Passing 200 Mesh Sieve: Four (4) samples were selected to determine the percent of materials, by dry weight, finer than the U.S. No. 200 mesh sieve. This test was performed in accordance with ASTM D 1140.

The laboratory test results are shown on the boring logs at the depth of the tested sample. Abbreviations for laboratory data are shown below.

NM = Natural Moisture Content (%)
-200 = Percent finer than the U.S. No. 200 mesh sieve

## CONE SOUNDINGS

CPT Log sheets graphically show the cone tip resistance, friction ratio, equivalent N-value and interpreted soil type at each sounding location. Soil classifications and data were interpreted from methods recommended by Robertson and Campanella and/or the Sweidh Geotechnical Institute Information Publication No. 15E. Correlations between Cone Resistance values and Standard Penetration Testing "N" values were performed according to methods developed by Robertson, Campanella and Wightman.

The soil types and stratigraphy shown on the CPT Log sheets are based upon material parameters measured and evaluated as the cone is advanced. The CPT Log sheets were developed for general information only. Users should exercise sound judgment when using the tabulated CPT data for interpretation of soil properties such as shear strength, friction angle, etc., to achieve reliable geotechnical parameters. We highly recommend the engineer be thoroughly familiar with and fully understand the capabilities of the CPT test before using this information for design purposes.

## SOIL AND GROUNDWATER CONDITIONS

In general, the soils encountered within our cone soundigns and macro-core borings were sands throughout the investigated depth. The sands typically ranged from relatively clean to slightly silty or silty sands and the relative density ranged from loose to firm. See the attached Log of Boring sheets for detailed soil descriptions.

On the date of our field testing (November 4, 2013), groundwater was measured at depths ranging from about 4.8 to 9.2 feet below existing grades at the time of boring completion. Fluctuations in the water table will occur due to seasonal precipitation differences; and therefore, groundwater levels should be verified prior to construction.

## CREEK BOTTOM CONDITIONS

Two (2) samples of the creek bottom materials (one on each end of the culvert) were obtained using a modified macro-core sampler. Materials encountered are described on the attached Log of Boring sheets B-1 and B-2 and consisted of about 2 inches of organics underlain by sands to the termination depth of the samples at 2.7 and 3.8 feet, respectively.

On the north side of the culvert, probing with a steel rod encountered an apparent concrete slab 6.5 feet below the water level and extending about 13 feet beyond the culvert. Creek bottom soils north of the slab were generally loose. On the south side of the culvert, no slab was encountered and the soils were generally firm.

## GENERAL COMMENTS

The soil samples obtained as a part of this geotechnical investigation will be held for a minimum period of 30 days. After this period, the samples will be disposed of unless we are specifically requested in writing to do otherwise.

This report has been prepared in order to aid in the evaluation of this property and to assist the engineers in the structural design. It is intended for use with regard to the specific project discussed herein.

While the soil test borings performed for this project are representative of subsurface conditions at their respective locations and for their respective vertical reaches, local variations of the subsurface material are anticipated and may be encountered. The boring logs and related information are based on the driller's logs and visual examination of selected samples in the laboratory. Delineation between soil types shown on the logs is approximate, and soil descriptions represent our interpretation of subsurface conditions at the designated boring locations on the particular date drilled.

This investigation only deals with the near surface soil deposits. It is not intended to include analysis / evaluation of deeper soil or rock strata where cavities and caverns may exist. This report does not address the possibility of sinkhole occurrence at the site.

We appreciate the opportunity to be of service to you on this project. Should additional information be required, please do not hesitate to contact us.

Sincerely,

**SOUTHERN EARTH SCIENCES, INC.**

Mark E. Wilson, P.E.
Eng. Reg. No.: 47707
State of Florida

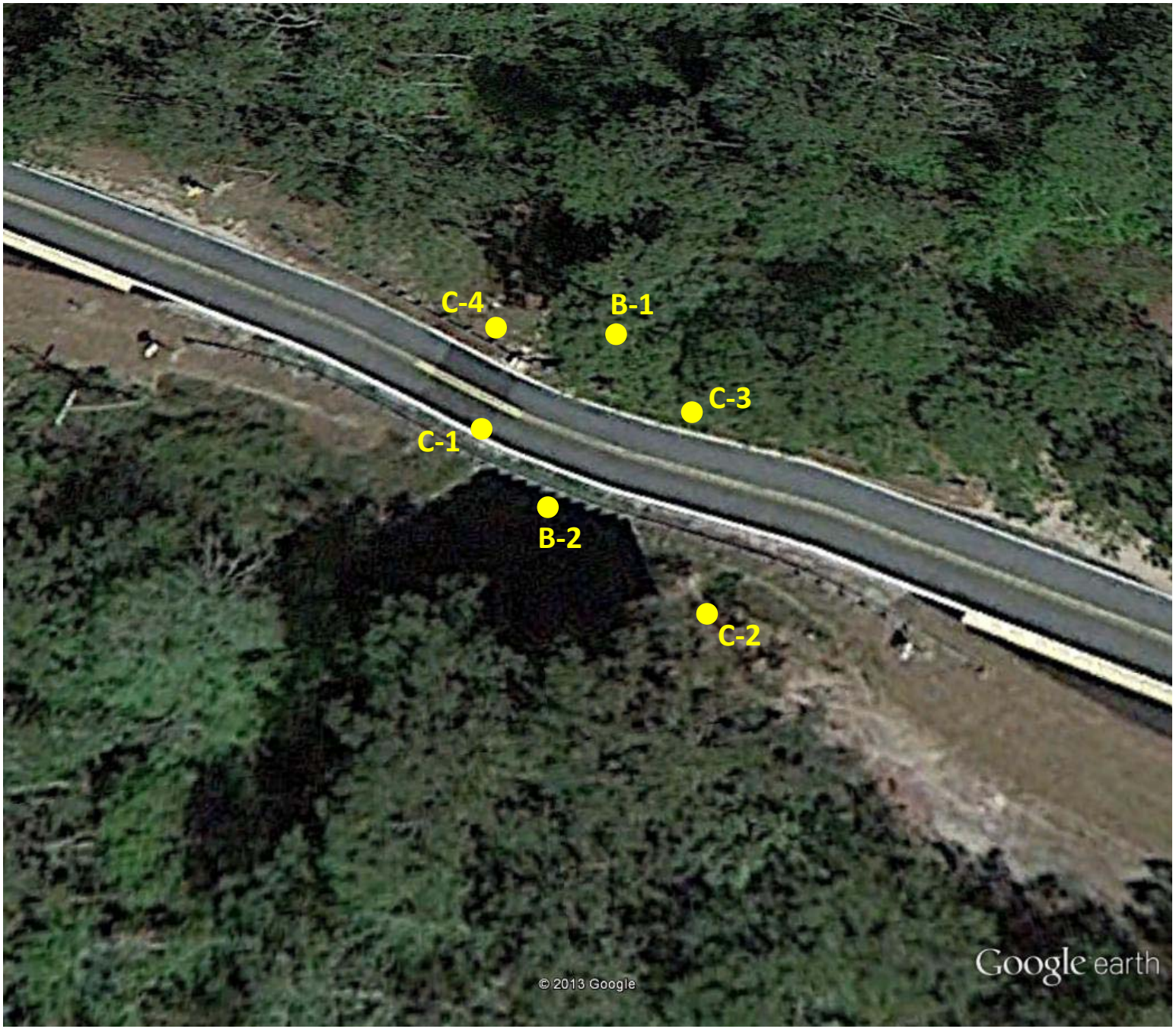


Google earth

feet 100

meters 40

**FIGURE 1**

# SOUTHERN EARTH SCIENCES, INC.

Operator: Jamison Short
Sounding: C-1
Cone Used: DSA1033
Groundwater Depth: 8.7 Ft.

CPT Date/Time: 11/4/2013 8:15:29 AM
Location: Surf Road Box Culvert Extension
Job Number: T13-181

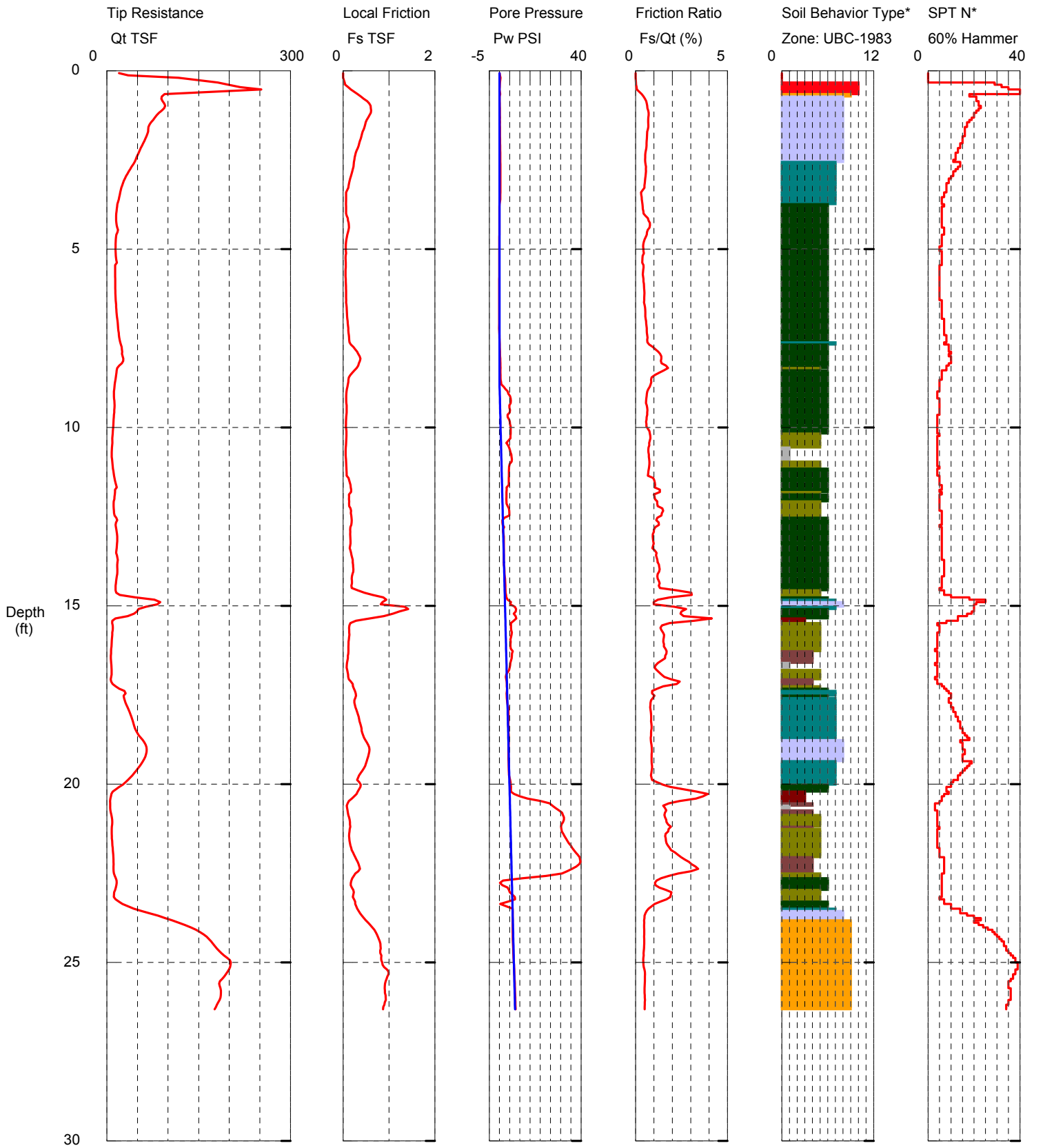


Maximum Depth = 26.31 feet

Depth Increment = 0.066 feet

1 sensitive fine grained
2 organic material
3 clay
4 silty clay to clay
5 clayey silt to silty clay
6 sandy silt to clayey silt
7 silty sand to sandy silt
8 sand to silty sand
9 sand
10 gravelly sand to sand
11 very stiff fine grained (*)
12 sand to clayey sand (*)

*Soil behavior type and SPT based on data from UBC-1983

# SOUTHERN EARTH SCIENCES, INC.

Operator: Jamison Short
Sounding: C-2
Cone Used: DSA1033
Groundwater Depth: 4.8 Ft.

CPT Date/Time: 11/4/2013 9:08:26 AM
Location: Surf Road Box Culvert Extension
Job Number: T13-181

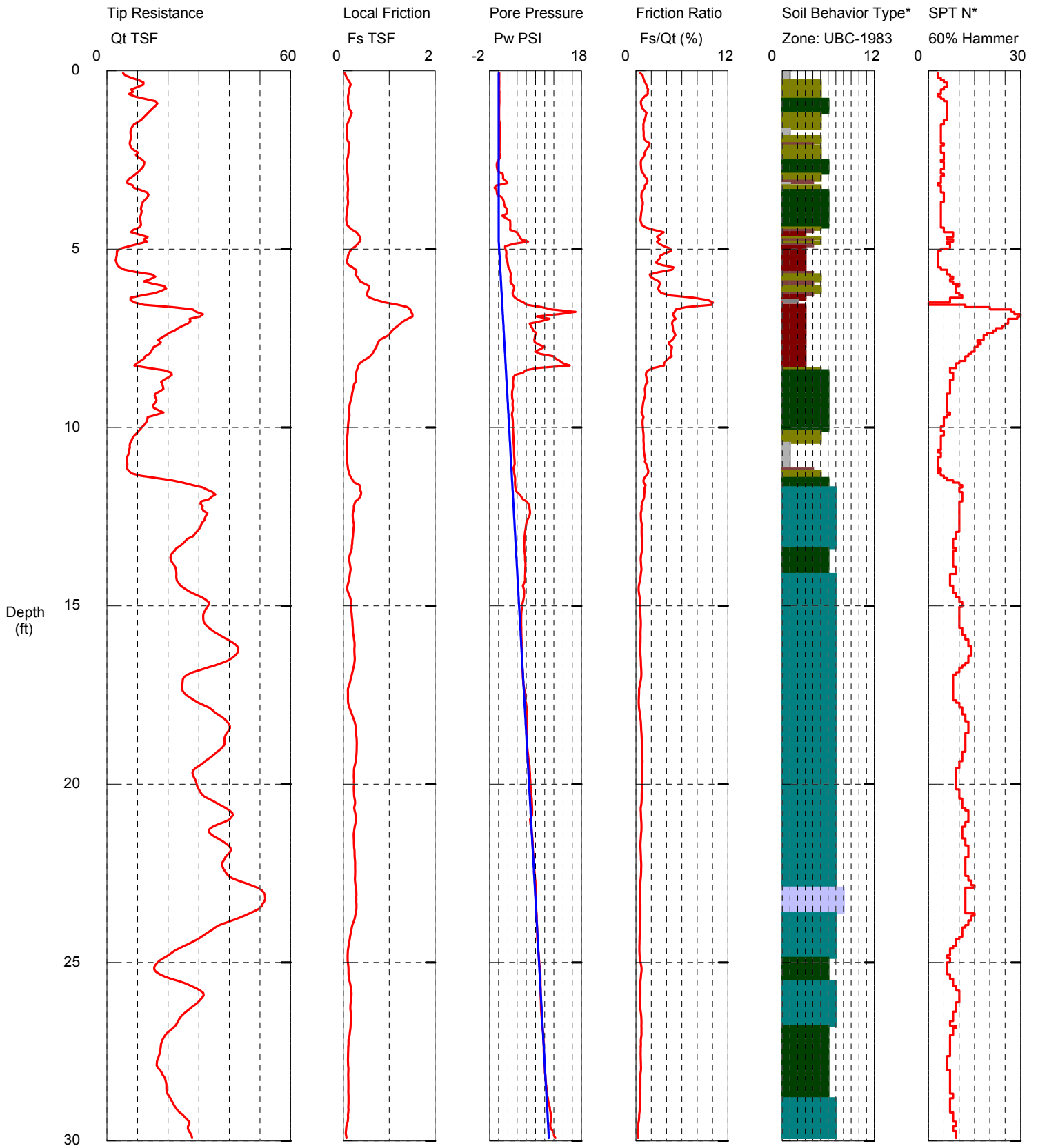


Maximum Depth = 29.92 feet

Depth Increment = 0.066 feet

1 sensitive fine grained
2 organic material
3 clay
4 silty clay to clay
5 clayey silt to silty clay
6 sandy silt to clayey silt
7 silty sand to sandy silt
8 sand to silty sand
9 sand
10 gravelly sand to sand
11 very stiff fine grained (*)
12 sand to clayey sand (*)

*Soil behavior type and SPT based on data from UBC-1983

# SOUTHERN EARTH SCIENCES, INC.

Operator: Jamison Short
Sounding: C-3
Cone Used: DSA1033
Groundwater Depth: 8.0 Ft.

CPT Date/Time: 11/4/2013 9:52:03 AM
Location: Surf Road Box Culvert Extension
Job Number: T13-181

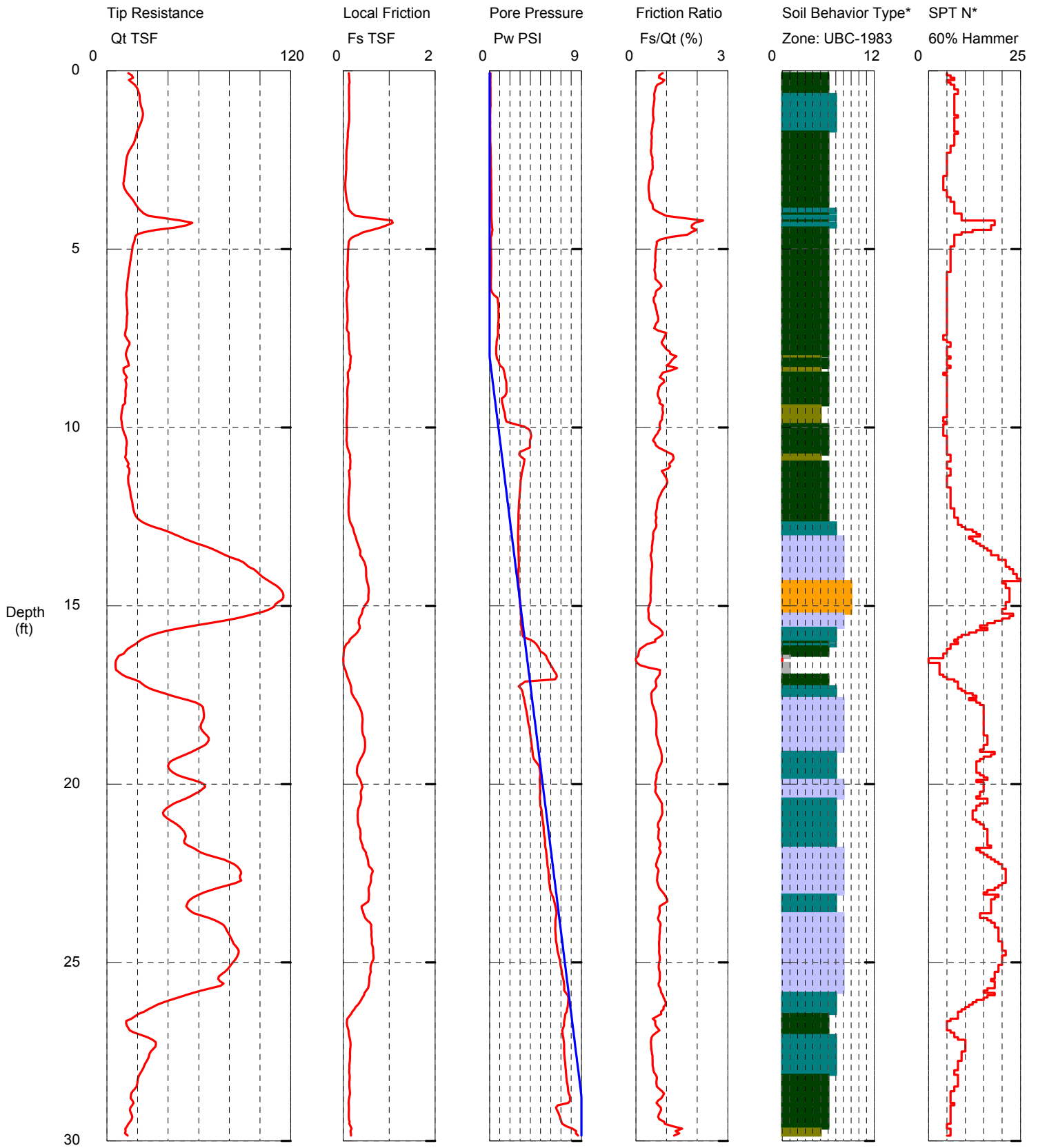


Maximum Depth = 29.86 feet

Depth Increment = 0.066 feet

1 sensitive fine grained
2 organic material
3 clay
4 silty clay to clay
5 clayey silt to silty clay
6 sandy silt to clayey silt
7 silty sand to sandy silt
8 sand to silty sand
9 sand
10 gravelly sand to sand
11 very stiff fine grained (*)
12 sand to clayey sand (*)

*Soil behavior type and SPT based on data from UBC-1983

# SOUTHERN EARTH SCIENCES, INC.

Operator: Jamison Short
Sounding: C-4
Cone Used: DSA1033
Groundwater Depth: 9.2 Ft.

CPT Date/Time: 11/4/2013 10:44:17 AM
Location: Surf Road Box Culvert Extension
Job Number: T13-181

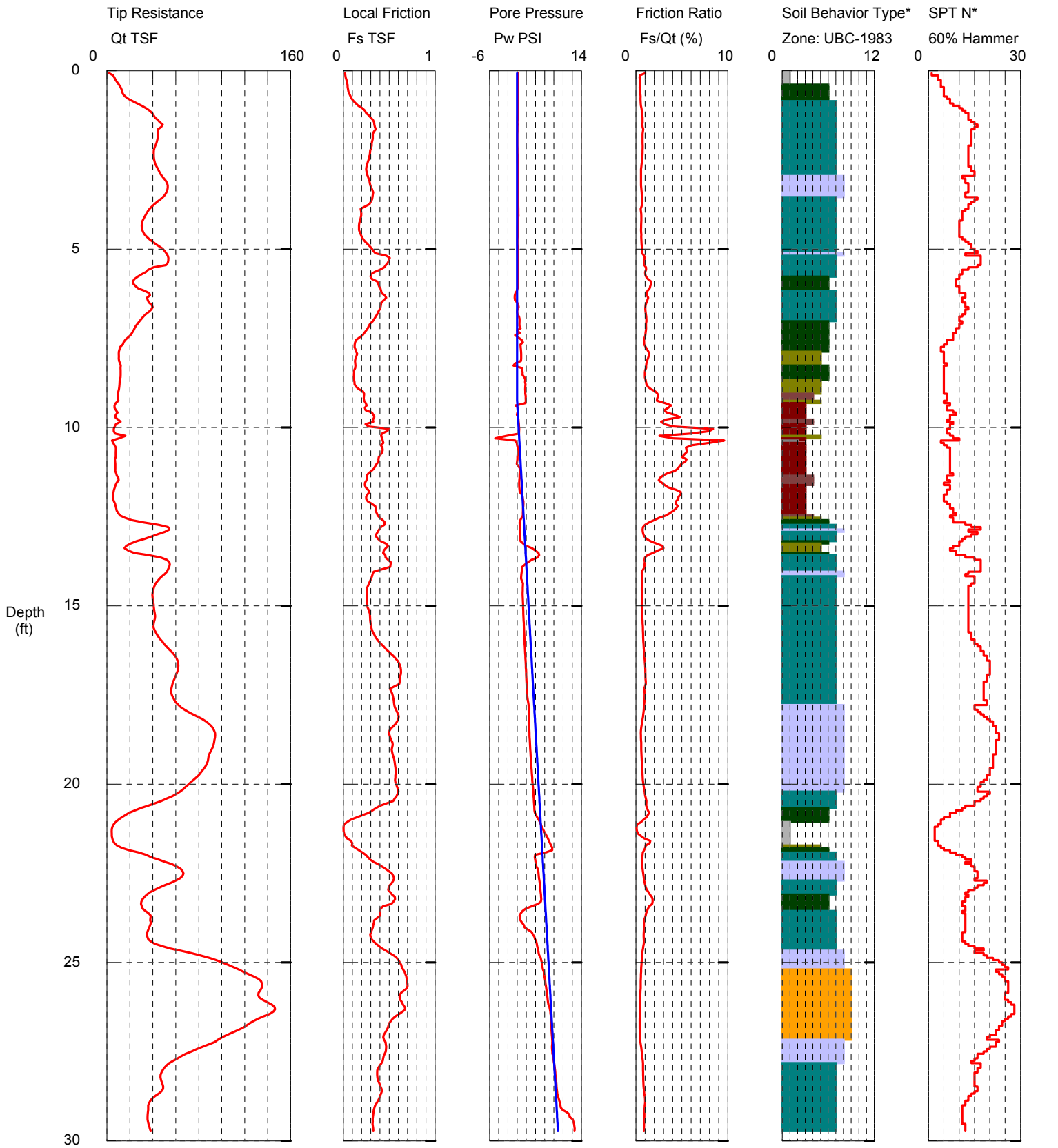


Maximum Depth = 29.72 feet

Depth Increment = 0.066 feet

1 sensitive fine grained
2 organic material
3 clay
4 silty clay to clay
5 clayey silt to silty clay
6 sandy silt to clayey silt
7 silty sand to sandy silt
8 sand to silty sand
9 sand
10 gravelly sand to sand
11 very stiff fine grained (*)
12 sand to clayey sand (*)

*Soil behavior type and SPT based on data from UBC-1983

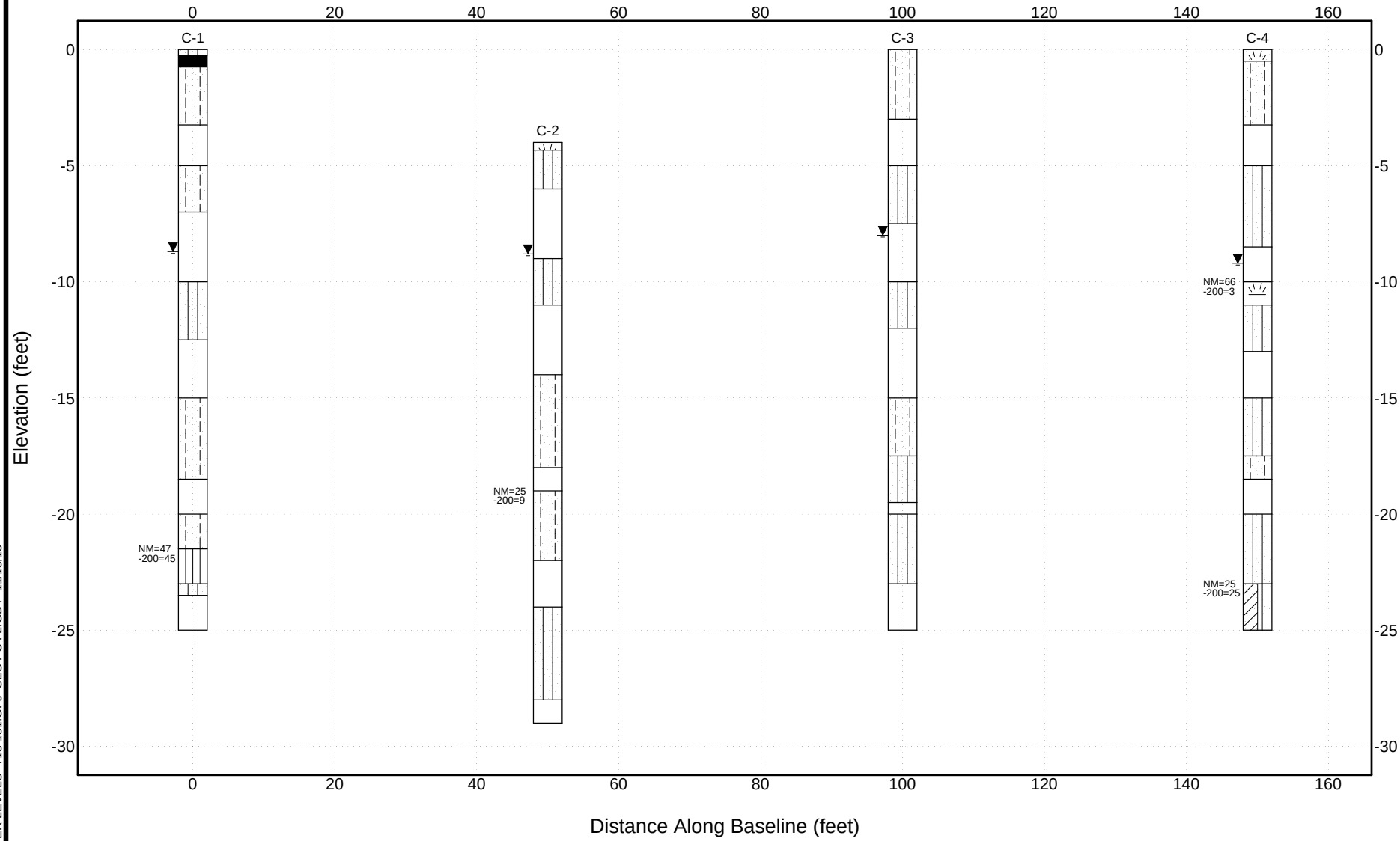


SOUTHERN EARTH SCIENCES, inc.

USCS Silty Sand

Asphalt

USCS Poorly-graded Sand with Silt

USCS Silt

Topsoil

USCS Peat

# SUBSURFACE PROFILE

Project: Surf Road Box Culvert Extension

Location: Sopchoppy, FL

Number: T13-181

STRATIGRAPHY AND WATER LEVELS T13-181.GPJ SES PC FL.GDT 11/13/13

# LOG OF BORING C-1



**PROJECT:** Surf Road Box Culvert Extension
**LOCATION:** Sopchoppy, FL
**PROJECT NO.:** T13-181
**DATE:** 11/04/13

**METHOD:** Direct-Push
**DRILLER:** J. Short
**ENGR / GEOL:** M. Wilson
**SURFACE ELEVATION:** Unknown

LOCATION: See Attached Figure 1

| Elevation / Depth | USCS | MATERIAL DESCRIPTION | N Value (blows/ft) 20 40 60 80 / Atterberg Limits Natural Moisture PL MC LL 20 40 60 80 | NATURAL MOISTURE (%) | ATTERBERG LIMITS (%) LIQUID LIMIT LL | PLASTIC LIMIT PL | PLASTICITY INDEX PI | PASSING #200 SIEVE (%) |
|---|---|---|---|---|---|---|---|---|
| 0 | SM | Gray Fine Silty SAND | | | | | | |
| | SP-SM | Recycled Asphalt Pavement (RAP) | | | | | | |
| | | Gray/Light Gray/Tan Fine Slightly Silty SAND | | | | | | |
| | | No Recovery | | | | | | |
| 5 | SP-SM | Gray/Light Gray/Tan Fine Slightly Silty SAND | | | | | | |
| | | No Recovery | | | | | | |
| 10 | SM | Gray/Brown Fine Silty SAND | | | | | | |
| | | No Recovery | | | | | | |
| 15 | SP-SM | Dark Gray/Gray Fine Silghtly Silty SAND | | | | | | |
| | | No Recovery | | | | | | |
| 20 | SP-SM | Gray Fine Slightly Silty SAND | | | | | | |
| | ML | Dark Gray Sandy SILT with sand seams | ● | 47 | | | | 45 |
| | SM | Dark Gray Fine Silty SAND | | | | | | |
| | | No Recovery | | | | | | |
| 25 | | | | | | | | |

Water Level Est.: ▽ Measured: ▼ Perched: ▽

**Notes:**

Water Observations: Groundwater depth measured at 8.7' at completion of drilling.

N - SPT Data (Blows/Ft) P - Pocket Penetrometer (tsf)

Sample Key: ◪ SPT ■ Shelby Tube

SOUTHERN EARTH SCIENCES, inc.

# LOG OF BORING C-2



**PROJECT:** Surf Road Box Culvert Extension
**LOCATION:** Sopchoppy, FL
**PROJECT NO.:** T13-181
**DATE:** 11/04/13

**METHOD:** Direct-Push
**DRILLER:** J. Short
**ENGR / GEOL:** M. Wilson
**SURFACE ELEVATION:** Unknown

LOCATION: See Attached Figure 1

| Elevation / Depth | Soil Symbols Sampler Symbols and Field Test Data | USCS | MATERIAL DESCRIPTION | ▲ N Value (blows/ft) 20 40 60 80 / Atterberg Limits Natural Moisture PL MC LL 20 40 60 80 | NATURAL MOISTURE (%) | ATTERBERG LIMITS (%) LIQUID LIMIT LL | PLASTIC LIMIT PL | PLASTICITY INDEX PI | PASSING #200 SIEVE (%) |
|---|---|---|---|---|---|---|---|---|---|
| 0 | | SM | Gray Fine Silty SAND with organics (Topsoil) | | | | | | |
| | | | Gray/Light Brown Fine Silty SAND | | | | | | |
| | | | No Recovery | | | | | | |
| 5 | | SM | Gray/Light Gray Fine Silty SAND with tree roots | | | | | | |
| | | | No Recovery | | | | | | |
| 10 | | SP-SM | Gray Fine Silghtly Silty SAND | | | | | | |
| | | | No Recovery | | | | | | |
| 15 | | SP-SM | Dark Gray Fine Slightly Silty SAND | | 25 | | | | 9 |
| | | | No Recovery | | | | | | |
| 20 | | SM | Dark Gray Fine Silty SAND | | | | | | |
| | | | No Recovery | | | | | | |
| 25 | | | | | | | | | |

Water Level Est.: ▽ Measured: ▼ Perched: ▽

**Notes:**

Water Observations: Groundwater depth measured at 4.8' at completion of drilling.

N - SPT Data (Blows/Ft) P - Pocket Penetrometer (tsf)

Sample Key: ◪ SPT ■ Shelby Tube

SOUTHERN EARTH SCIENCES, inc.

# LOG OF BORING C-3



**PROJECT:** Surf Road Box Culvert Extension
**LOCATION:** Sopchoppy, FL
**PROJECT NO.:** T13-181
**DATE:** 11/04/13

**METHOD:** Direct-Push
**DRILLER:** J. Short
**ENGR / GEOL:** M. Wilson
**SURFACE ELEVATION:** Unknown

LOCATION: See Attached Figure 1

| Elevation / Depth | Soil Symbols Sampler Symbols and Field Test Data | USCS | MATERIAL DESCRIPTION | ▲ N Value (blows/ft) 20 40 60 80 / Atterberg Limits Natural Moisture PL MC LL 20 40 60 80 | NATURAL MOISTURE (%) | ATTERBERG LIMITS (%) LIQUID LIMIT (LL) | PLASTIC LIMIT (PL) | PLASTICITY INDEX (PI) | PASSING #200 SIEVE (%) |
|---|---|---|---|---|---|---|---|---|---|
| 0 | | SP-SM | Gray/Light Gray Fine Slightly Silty SAND | | | | | | |
| | | | No Recovery | | | | | | |
| 5 | | SM | Gray to Dark Gray Fine Silty SAND | | | | | | |
| | ▼ | | No Recovery | | | | | | |
| 10 | | SM | Gray to Dark Gray Fine Silty SAND with roots | | | | | | |
| | | | No Recovery | | | | | | |
| 15 | | SP-SM | Gray Fine Slightly Silty SAND | | | | | | |
| | | SM | Dark Gray Fine Silty SAND | | | | | | |
| | | | No Recovery | | | | | | |
| 20 | | SM | Dark Gray Fine Silty SAND | | | | | | |
| | | | No Recovery | | | | | | |
| 25 | | | | | | | | | |

Water Level Est.: ▽ Measured: ▼ Perched: ▽

**Notes:**

Water Observations: Groundwater depth measured at 8.0' at completion of drilling.

N - SPT Data (Blows/Ft) P - Pocket Penetrometer (tsf)

Sample Key: ◪ SPT ■ Shelby Tube

SOUTHERN EARTH SCIENCES, inc.

# LOG OF BORING C-4



**PROJECT:** Surf Road Box Culvert Extension
**LOCATION:** Sopchoppy, FL
**PROJECT NO.:** T13-181
**DATE:** 11/04/13

**METHOD:** Direct-Push
**DRILLER:** J. Short
**ENGR / GEOL:** M. Wilson
**SURFACE ELEVATION:** Unknown

LOCATION: See Attached Figure 1

| Elevation / Depth | Soil Symbols Sampler Symbols and Field Test Data | USCS | MATERIAL DESCRIPTION | ▲ N Value (blows/ft) 20 40 60 80 / Atterberg Limits Natural Moisture PL MC LL 20 40 60 80 | NATURAL MOISTURE (%) | ATTERBERG LIMITS (%) LIQUID LIMIT LL | PLASTIC LIMIT PL | PLASTICITY INDEX PI | PASSING #200 SIEVE (%) |
|---|---|---|---|---|---|---|---|---|---|
| 0 | | SP-SM | Gray Fine Silty SAND with organics (Topsoil) | | | | | | |
| | | | Gray/Tan Fine Slightly Silty SAND | | | | | | |
| | | | No Recovery | | | | | | |
| 5 | | SM | Gray Fine Silty SAND | | | | | | |
| | | | Dark Gray Fine Silty SAND with organic fines | | | | | | |
| | | | Gray Fine Silty SAND | | | | | | |
| | | | Dark Gray Fine Silty SAND with roots | | | | | | |
| | ▼ | | No Recovery | | | | | | |
| 10 | | PT | Dark Gray Sandy PEAT | ● | 66 | | | | 3 |
| | | SM | Gray to Brown Fine Silty SAND | | | | | | |
| | | | No Recovery | | | | | | |
| 15 | | SM | Brown Fine Silty SAND | | | | | | |
| | | SP-SM | Light Gray Fine Slightly Silty SAND | | | | | | |
| | | | No Recovery | | | | | | |
| 20 | | SM | Gray/Brown Fine Silty SAND | | | | | | |
| | | SC-SM | Gray/Brown Fine Silty Clayey SAND | ● | 25 | | | | 25 |
| 25 | | | | | | | | | |

Water Level Est.: ▽ Measured: ▼ Perched: ▼

**Notes:**

Water Observations: Groundwater depth measured at 9.2' at completion of drilling.

N - SPT Data (Blows/Ft) P - Pocket Penetrometer (tsf)

Sample Key: ◪ SPT ■ Shelby Tube

SOUTHERN EARTH SCIENCES, inc.

# LOG OF BORING B-1



**PROJECT:** Surf Road Box Culvert Extension
**LOCATION:** Sopchoppy, Florida
**PROJECT NO.:** T13-181
**DATE:** 11/16/13

**METHOD:** Direct Push
**DRILLER:** RC
**ENGR / GEOL:** MW/LF
**SURFACE ELEVATION:** Unknown

| Elevation / Depth | Soil Symbols Sampler Symbols and Field Test Data | USCS | LOCATION / MATERIAL DESCRIPTION | ▲ N Value (blows/ft) 20 40 60 80 / Atterberg Limits Natural Moisture PL MC LL 20 40 60 80 | NATURAL MOISTURE (%) | ATTERBERG LIMITS (%) LIQUID LIMIT LL | PLASTIC LIMIT PL | PLASTICITY INDEX PI | PASSING #200 SIEVE (%) |
|---|---|---|---|---|---|---|---|---|---|
| 0.0 | | | Organics | | | | | | |
| | | SP-SC | Dark Brown and Brown Slightly Clayey Fine SAND | | | | | | |
| 0.5 | | | | | | | | | |
| 1.0 | | | | | | | | | |
| 1.5 | | | | | | | | | |
| | | SP-SM | Gray and Brown Slightly Silty Fine SAND | | | | | | |
| 2.0 | | | | | | | | | |
| 2.5 | | | | | | | | | |
| 3.0 | | | | | | | | | |
| 3.5 | | | | | | | | | |
| 4.0 | | | | | | | | | |
| 4.5 | | | | | | | | | |
| 5.0 | | | | | | | | | |

Water Level Est.: ▽ Measured: ▼ Perched: ▼ **Notes:**

Water Observations: Depth to Bottom: 6.5 feet

N - SPT Data (Blows/Ft) P - Pocket Penetrometer (tsf)

Sample Key: ◪ SPT ■ Shelby Tube

**SOUTHERN EARTH SCIENCES, inc.**

# LOG OF BORING B-2



**PROJECT:** Surf Road Box Culvert Extension
**LOCATION:** Sopchoppy, Florida
**PROJECT NO.:** T13-181
**DATE:** 11/16/13

**METHOD:** Direct Push
**DRILLER:** RC
**ENGR / GEOL:** MW/LF
**SURFACE ELEVATION:** Unknown

| Elevation / Depth | Soil Symbols Sampler Symbols and Field Test Data | USCS | LOCATION / MATERIAL DESCRIPTION | ▲ N Value (blows/ft) 20 40 60 80 / Atterberg Limits Natural Moisture PL MC LL 20 40 60 80 | NATURAL MOISTURE (%) | ATTERBERG LIMITS (%) LIQUID LIMIT LL | PLASTIC LIMIT PL | PLASTICITY INDEX PI | PASSING #200 SIEVE (%) |
|---|---|---|---|---|---|---|---|---|---|
| 0.0 | | | Organics | | | | | | |
| | | SP-SC | Dark Brown and Brown Slightly Clayey Fine SAND (with Trace Organics to 1.0') | | | | | | |
| 0.5 | | | | | | | | | |
| 1.0 | | | | | | | | | |
| 1.5 | | | | | | | | | |
| 2.0 | | | | | | | | | |
| | | SP-SC | Dark Gray Slightly Clayey Fine SAND | | | | | | |
| 2.5 | | SP-SM | Gray and Brown Slightly Silty Fine SAND | | | | | | |
| 3.0 | | | | | | | | | |
| 3.5 | | | | | | | | | |
| 4.0 | | | | | | | | | |
| 4.5 | | | | | | | | | |
| 5.0 | | | | | | | | | |

Water Level Est.: ▽ Measured: ▼ Perched: ▼ **Notes:**

Water Observations: Depth to Bottom: 8.5 feet

N - SPT Data (Blows/Ft) P - Pocket Penetrometer (tsf)

Sample Key: ◪ SPT ■ Shelby Tube

**SOUTHERN EARTH SCIENCES, inc.**

# IMPORTANT INFORMATION
## ABOUT YOUR
# GEOTECHNICAL ENGINEERING REPORT

More construction problems are caused by site subsurface conditions than any other factor. As troublesome as subsurface problems can be, their frequency and extent have been lessened considerably in recent years, thanks to the Association of Soil and Foundation Engineers (ASFE).

When ASFE was founded in 1969, subsurface problems were frequently being resolved through lawsuits. In fact, the situation had grown to such alarming proportions that consulting geotechnical engineers had the worst professional liability record of all design professionals. By 1980, ASFE–*member consulting soil and foundation engineers had the best professional liability record.* The dramatic turn-about can be attributed directly to client acceptance of problem-solving programs and materials developed by ASFE for its members' application. *This acceptance was gained because clients perceived the* ASFE *approach to be in their own best interests.* Disputes benefit only those who earn their living from others' disagreements.

The following suggestions and observations are offered to help you reduce the geotechnical-related delays, cost over-runs and other costly headaches that can occur during a construction project.

## A GEOTECHNICAL ENGINEERING REPORT IS BASED ON A UNIQUE SET OF PROJECT-SPECIFIC FACTORS

A geotechnical engineering report is based on a subsurface exploration plan designed to incorporate a unique set of project-specific factors. These typically include: the general nature of the structure involved, its size and configuration; the location of the structure on the site and its orientation; physical concomitants such as access roads, parking lots, and underground utilities, and the level of additional risk which the client assumed by virtue of limitations imposed upon the exploratory program. To help avoid costly problems, consult the geotechnical engineer to determine how any factors which change subsequent to the date of his report may affect his recommendations.

Unless your consulting geotechnical engineer indicates otherwise, *your geotechnical engineering report should not be used:*

- When the nature of the proposed structure is changed, for example, if an office building will be erected instead of a parking garage, or if a refrigerated warehouse will be built instead of an unrefrigerated one;
- When the size or configuration of the proposed structure is altered;
- When the location or orientation of the proposed structure is modified ;
- When there is a change in ownership, or
- For application to an adjacent site.

*A geotechnical engineer cannot accept responsibility for problems which may develop if he is not consulted after factors considered in his report's development have changed.*

## MOST GEOTECHNICAL "FINDINGS" ARE PROFESSIONAL ESTIMATES

Site exploration identifies actual subsurface conditions only at those points where samples are taken, when they are taken. Data derived through sampling and subsequent laboratory testing are extrapolated by the geotechnical engineer who then renders an opinion about overall subsurface conditions, their likely reaction to proposed construction activity, and appropriate foundation design. Even under optimal circumstances actual conditions may differ from those opined to exist, because no geotechnical engineer, no matter how qualified, and no subsurface exploration program, no matter how comprehensive, can reveal what is hidden by earth, rock and time. For example, the actual interface between materials may be far more gradual or abrupt than the report indicates, and actual conditions in areas not sampled may differ from predictions. *Nothing can be done to prevent the unanticipated, but steps can be taken to help minimize their impact.* For this reason, *most experienced owners retain their geotechnical consultant through the construction stage*, to identify variances, conduct additional tests which may be needed, and to recommend solutions to problems on site.

## SUBSURFACE CONDITIONS CAN CHANGE

Subsurface conditions may be modified by constantly-changing natural forces. Because a geotechnical engineering report is based on conditions which existed at the time of subsurface exploration, *construction decisions should not be based on a geotechnical engineering report whose adequacy may have been affected by time.* Speak with the geotechnical consultant to learn if additional tests are advisable before construction starts.

Construction operations at or adjacent to the site and natural events such as floods, earthquakes or groundwater fluctuations may also affect subsurface conditions and, thus, the continuing adequacy of a geotechnical report. The geotechnical engineer should be kept apprised of any such events, and should be consulted to determine if additional tests are necessary.

## A GEOTECHNICAL ENGINEERING REPORT IS SUBJECT TO MISINTERPRETATION

Costly problems can occur when other design professionals develop their plans based on misinterpretation of a geotechnical engineering report. To help avoid these problems, the geotechnical engineer should be retained to work with other appropriate design professionals to explain relevant findings and to review the adequacy of their plans and specifications relative to geotechnical issues.

## BORING LOGS SHOULD NOT BE SEPARATED FROM THE ENGINEERING REPORT

Final boring logs are developed by the geotechnical engineer based upon his interpretation of field logs (assembled by site personnel) and laboratory evaluation of field samples. Only final boring logs customarily are included in geotechnical engineering reports. These logs should not under any circumstances be redrawn for inclusion in architectural or other design drawings, because drafters may commit errors or omissions in the transfer process. Although photographic reproduction eliminates this problem, it does nothing to minimize the possibility of contractors misinterpreting the logs during bid preparation. When this occurs, delays, disputes and unanticipated costs are the all-too-frequent result.

To minimize the likelihood of boring log misinterpretation, give contractors ready access to the complete geotechnical engineering report. Those who do not provide such access may proceed under the mistaken impression that simply disclaiming responsibility for the accuracy of subsurface information always insulates them from attendant liability. Providing the best available information to contractors helps prevent costly construction problems and the adversarial attitudes which aggravate them to disproportionate scale.

## READ RESPONSIBILITY CLAUSES CLOSELY

Because geotechnical engineering is based extensively on judgment and opinion, it is far less exact than other design disciplines. This situation has resulted in wholly unwarranted claims being lodged against geotechnical consultants. To help prevent this problem, geotechnical engineers have developed model clauses for use in written transmittals. These are not exculpatory clauses designed to foist the geotechnical engineer's liabilities onto someone else. Rather they are definitive clauses which identify where the geotechnical engineer's responsibility begin and end. Their use helps all parties involved recognize their individual responsibilities and take appropriate action. Some of theses definitive clauses are likely to appear in your geotechnical engineering report, and you are encouraged to read them closely. Your geotechnical engineer will be pleased to give full and frank answers to your questions.

## OTHER STEPS YOU CAN TAKE TO REDUCE RISK

Your consulting geotechnical engineer will be pleased to discuss other techniques which can be employed to mitigate risk. In addition, the Association of Soil and Foundation Engineers has developed a variety of materials which may be beneficial. Contact ASFE for a complimentary copy of its publications directory.

Published by

ASFE

ASSOCIATION OF SOIL AND FOUNDATION ENGINEERS
8811 Colesville Road / Suite 225
Silver Spring, Maryland 20910
301/565-2733

CONSTRUCTION DRAWINGS FOR

# Surf Road NRCS

PREPARED FOR:

## Board of County Commissioners
## Wakulla County, Florida

WAKULLA COUNTY

## VICINITY MAP

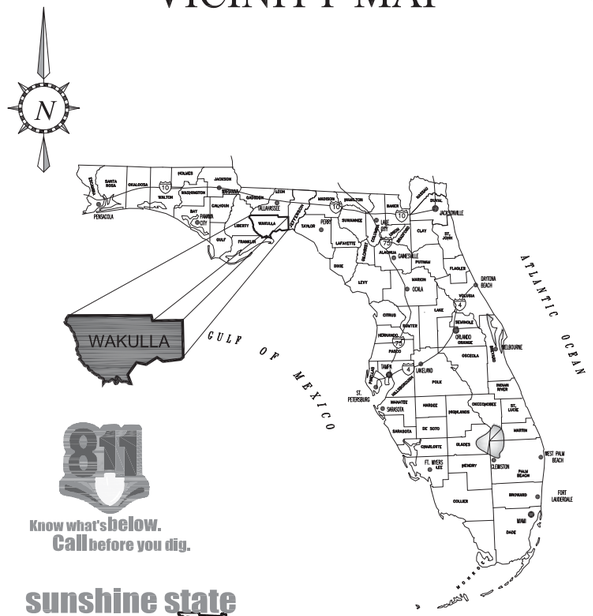


811
Know what's below.
Call before you dig.

sunshine state ONE CALL of florida

| SHEET | DESCRIPTION: |
|---|---|
| C1 | COVER SHEET |
| C2 | GENERAL NOTES |
| C2.1 | STRUCTURAL NOTES |
| C3 | EXISTING CONDITIONS/EROSION CONTROL |
| C4 | PLAN/GRADING |
| C5 | SOD AND RIPRAP LAYOUT |
| C6-C8 | PROFILES |
| C9-C10 | EROSION CONTROL DETAILS |
| C11 | SOVERIGN SUBMERGED LAND EXHIBIT |
| C12 | WETLAND EXHIBIT |
| S1-S5 | STRUCTURAL DETAILS |
| | |

| REV. NO. | REV. DATE | REVISION DESCRIPTION | RELEASED TO | RELEASE DATE |
|---|---|---|---|---|
| | 1/21/14 | REVISED LABELING, ADDED LEGEND AND REVISED STRUCTURAL DETAILS | | |
| | | | | |
| | | | | |
| | | | | |
| | | | | |

## LOCATION MAP

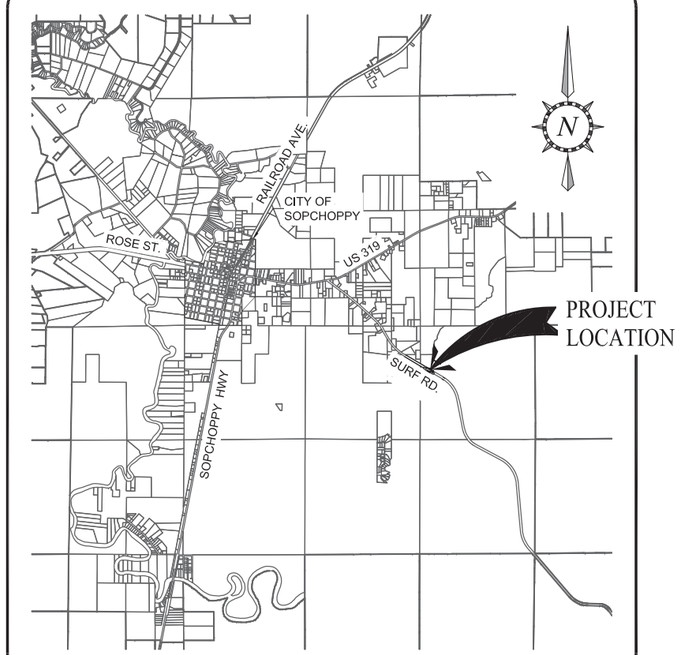


January 2014

PREPARED BY:

PREBLE-RISH INC
CONSULTING ENGINEERS AND SURVEYORS
CIVIL • SURVEYING • SITE PLANNING
36 JASPER THOMAS ROAD, CRAWFORDVILLE, FL 32327

ERRORS AND OMISSIONS, IF ANY. IN THESE CONSTRUCTION DOCUMENTS SHALL IMMEDIATELY BE BROUGHT TO THE ATTENTION OF THE ENGINEER FOR RESOLUTION.

GENERAL CONTRACTOR TO THOROUGHLY INSPECT EXISTING CONDITIONS PRIOR TO SUBMITTING BIDS. ANY DISCREPANCIES BETWEEN PLANS AND FIELD CONDITIONS SHALL BE NOTED AT ONCE AND CALLED TO THE ENGINEER'S ATTENTION PRIOR TO SUBMITTING BIDS.

ALL CORRESPONDENCE IN REGARDS TO THESE CONSTRUCTION/BID DOCUMENTS SHALL BE DIRECTED TO ALAN WISE AT PREBLE-RISH, INC. CONSULTING ENGINEERS
36 JASPER THOMAS ROAD, CRAWFORDVILLE, FL 32327

PROJECT NUMBER: 203.108

EB# 0006155

January 21, 2014 (18:59:42 EST)
C:\CIVIL 3D PROJECTS\203.108 SURF RD\ROADWAY\COVER SHEET C1.DWG

## NOTES:

1. The Contractor shall become familiar with the permit and inspection requirements specified by the various governmental agencies and the Agent. The Contractor is responsible for scheduling inspections at critical milestones and/or according to permit requirements.

2. Contractor shall check plans for conflicts and discrepancies and notify Agent prior to construction. Contractor shall notify the Agent of any conflicts before performing work in the affected area.

3. Contractor is responsible for repairing any damage to existing facilities, above or below ground, which may occur as a result of the work performed by the Contractor called for in this contract.

4. It is the responsibility of Contractor to establish the following in the field: existing utility locations, Right of Way lines, benchmarks, centerlines and stationing as may be required to construct the project.

5. All construction debris and other waste material shall be disposed of off-site in accordance with applicable regulatory agency requirements.

6. Contractor may stockpile materials within the limits of the current construction phase. If stockpiling is necessary, Contractor shall locate the material at his discretion, using appropriate erosion and sedimentation control Best Management Practices (BMPs).

7. Contractor shall notify the Agent if they encounter any unidentified utility or structure during construction that impacts the project implementation.

8. Contractor shall clear and grub only those portions of the project necessary for construction. All disturbed areas shall be sodded.

9. Earthwork that results from site excavation is to be utilized on-site if of suitable material. Excess material is to be disposed of in accordance with local, State, and Federal regulations.

10. The burning of materials and/or debris as a means of disposal is prohibited unless done so off site in an acceptable, approved manner.

11. For any equipment or materials stored or staged on property not owned by Wakulla County, Contractor, if required, shall obtaining written permission from adjacent property owners prior to storing or staging. A copy of the written permission shall be provided to the Agent prior to storing or staging.

12. Non-select soils, when encountered, shall be removed from construction areas and back-filled with select materials in accordance with FDOT Index 500 and 505.

13. Any damage to existing topographic features (includes but not limited to property corners, structures, site features)not specifically related to the scope of work, shall be repaired to their original condition at Contractor's expense.

14. All deleterious subsurface material (i.e. mulch, peat, buried debris) is to be excavated in accordance with these plans.

15. Deleterious material is to be removed from the site. Excavated areas are to be backfilled with approved materials and compacted as shown on these plans.

16. Contractor shall be responsible for protecting excavations against collapse and will provide bracing, sheeting or shoring as necessary. Dewatering methods shall be used as required to keep work area dry while pipe and appurtenances are being placed.

17. Contractor shall stabilize by seed and mulch, sod, or other approved materials any disturbed areas within one (1) week of achieving finished grade. Contractor shall maintain such areas until final acceptance by the Agent.

18. Existing signage to remain that will be affected by construction shall be relocated during construction.

19. Contractor is responsible for contracting with an independent testing company to verify compaction. Upon completion of the work, Contractor shall have all test results signed and sealed by a Professional Engineer registered in the State of Florida pursuant to chapter 471 Florida Statutes and submitted to the Agent.

20. Contractor is responsible for providing as-built drawings to the Agent that have been prepared and certified by a registered professional surveyor.

21. The Contractor is responsible for ensuring that erosion is controlled on site and that no sedimentation leaves the project area. Additional erosion controls beyond what are shown in this plan may be necessary and are the responsibility of the Contractor.

22. As construction progresses, the Contractor shall make adjustments and/or CONST. additional measures to prevent direct flow or tracking of sediments onto adjacent property, conservation areas, public streets or drainage systems.

23. Any sediments, gravel or mud spilled, dropped, washed, or tracked from vehicles onto adjacent property, roadways or into storm drainage systems shall be recovered immediately and disposed of properly.

24. Temporary erosion and sediment control devices shall be placed adjacent to any waterway or drainage feature prior to construction and remain in place until construction of the feature is complete and all areas are suitably stabilized.

25. Contractor shall not bring any hazardous materials onto the project. Should Contractor require such for performing the contracted work, Contractor shall request in writing, written permission from the Agent. Contractor shall provide the Agent with a copy of the Material Safety Data Sheet (MSDS) for each hazardous material proposed for use. Since State does not treat petroleum products that are properly containerized and intended for equipment use as a hazardous material, such products do not need the MSDS submittal. Any known or suspected hazardous material found on the project by Contractor shall be immediately reported to the Agent and shall protect the area of known or suspected contamination from further access. The Agent will arrange for investigation, identification, and remediation of the hazardous material. Contractor shall not return to the area of contamination until approval is provided by tile Agent; however, Contractor shall relocate construction activities to another area of the project until such approval is provided.

26. Contractor shall furnish the Agent, prior to incorporation into the project, a certification from the Florida Department of Agriculture and Consumer Service Division of Plant Industry, stating that the sod, hay, straw, and mulch materials are free of noxious weeds.

27. Equipment maintenance and repair shall not be performed on site.

28. Storage of chemicals, cements, solvents, paints, or other potential water pollutants is prohibited on site. If these products are needed, they shall be brought to the site, utilized in a responsible manner, and removed from the site to prevent spills or leaks that would be detrimental to the environment or surrounding property.

29. The Contractor shall provide Maintenance of Traffic in accordance with the FDOT Index, 600 Series. At this location, the roadway can be completely closed for no longer than 3 weeks, and the contractor is responsible for adequate detour signage.

30. The contractor shall notify utility owners through sunshine one call (800-432-4770) at least 3 days in advance of performing any soil disturbing activities. The contractor is responsible for ensuring that the marks are protected during construction, or are re-marked as necessary by sunshine one call to delineate existing utilities. The contractor shall locate and verify all existing utilities in the field, prior to commencing construction. The contractor shall protect and/or relocate all existing utilities as necessary to construct the improvements shown herein. Unless otherwise stated, the contractor is responsible for the cost of said relocation or protection of existing utilities and these efforts shall be coordinated and approved by the utility owner. The contractor is responsible for repairing any damage to existing utility during the construction of the improvements shown herein.

31. Unless otherwis noted, indicated or detailed on the plans or in he specifications, the FDOT Standard Specifications for Road and Bridge Construction, 2013 edition and the FDOT index of Standard Details, 2013 edition shall be the governing specifications for materials and construction for the site work.

32. Concrete box culvert shall be in conformance w/FDOT index 289, 291 and 292.

33. The contractor shall utilize effective protective measures to protect the existing pavement during construction of these improvements. Any damage to existing roadway shall be repaired at the contractors expense to the satisfaction of the county.

PREBLE-RISH, INC. ALL RIGHTS RESERVED. NO PART OF THIS DOCUMENT MAY BE REPRODUCED OR UTILIZED IN ANY FORM WITHOUT PRIOR WRITTEN AUTHORIZATION OF PREBLE-RISH, INC.

EB# 0006155

| NO. | DATE: | APPR. | REVISION: |
|---|---|---|---|
| | | | |
| | | | |
| | | | |
| | | | |
| | | | |

SURF ROAD NRCS
GENERAL NOTES

PREBLE-RISH INC
CONSULTING ENGINEERS AND SURVEYORS
CIVIL • SURVEYING • SITE PLANNING
36 JASPER THOMAS ROAD, CRAWFORDVILLE, FL 32327

WAKULLA COUNTY
BOARD OF COUNTY COMMISSIONERS
WAKULLA COUNTY, FLORIDA

| | |
|---|---|
| DATE: JAN. 2013 | PROJECT NO. 203.108 |
| SCALE: As Shown | |
| DRAWN: BDD | SHEET C2 |
| CHECKED: | |

January 22, 2014 (11:48:13 EST)
C:\CIVIL 3D PROJECTS\203.108 SURF RD\ROADWAY\SURF ROAD-DSGNRD01.DWG

# GENERAL NOTES:

## 1) CONTRACTOR'S QUALIFICATIONS:

ONLY CONTRACTORS WHO HAVE PRIOR EXPERIENCE IN RETAINING WALL CONSTRUCTION AND DRIVING PILES WILL BE ALLOWED TO CONSTRUCT THIS PROJECT. CONTRACTORS MUST POSSESS A FLORIDA CONTRACTOR'S LICENSE FOR THIS TYPE OF WORK, AND MUST BE BONDED AND INSURED IN ACCORDANCE WITH THE GENERAL CONDITIONS OF THE BIDDING AND CONTRACT DOCUMENTS.

THE SUCCESSFUL BIDDER MUST PROVIDE THE NAMES AND CONTACT INFORMATION FOR ALL PROJECTS COMPLETED IN THE PAST 12 MONTHS WITH A CONTRACT VALUE OF $100,000 OR GREATER SO THAT THE OWNER CAN VERIFY REFERENCES. BAD REFERENCES FROM PREVIOUS CLIENTS MAY RESULT IN A REJECTION OF THE CONTRACTOR'S BID.

## 2) PILING AND PILE DRIVING:

USE HP 8X36 ASTM A 572 GRADE 50 STEEL PILINGS COATED WITH 12 TO 14 MILLS OF POLY-UREA OR EPOXY COAL TAR TO A DEPTH OF 4 FEET BELOW GROUND SURFACE ELEVATION.

PILE MAY BE DRIVEN WITH DIESEL, AIR OR DROP HAMMERS, DIESEL AND AIR HAMMERS MUST USE ENVIRONMENTALLY FRIENDLY FUELS AND LUBRICANTS.

CONTRACTORS SHALL CONSTRUCT A TEMPLATE OF STEEL PILES AND BEAMS TO GUIDE THE PILES DURING DRIVING. A PLAN THAT DEPICTS THE TEMPLATE/PILE GUIDES SHALL BE SUBMITTED TO THE ENGINEER FOR HIS REVIEW FOR APPROVAL PRIOR TO CONSTRUCTION. THE FINAL POSITION OF THE CENTER OF PILE AT THE BUTT END MAY NOT VARY FROM THE DESIGN HORIZONTAL POSITION MORE THAN 1.5" IN ANY DIRECTION

IT IS EXPECTED THAT THE PILES WILL BE DRIVEN TO THE FINAL BUTT ELEVATION WITHOUT NEED FOR CUT-OFFS. IF CUT-OFFS ARE REQUIRED THE CONTRACTOR WILL BE ENTITLED TO ADDITIONAL COMPENSATED FOR THAT WORK

## 3) TIE BACK RODS:

USE GREASED RODS ENCAPSULATED WITH SMOOTHED-WALLED PVC (PIPE .035") SUCH AS SKYLINE STEEL'S COLD ROLLED THREADED BAR AND THREADED BAR CONNECTORS CONFORMING TO ASTM A 722 (OR APPROVED EQUAL) AND HAVING THE MINIMUM WORKING CAPACITIES SHOWN ON THE PLANS.

## 4) STEEL PLATES:

USE ASTM A 36 STEEL FOR PLATES.

## 5) SHEET PILE COATING:

a) SHOP APPLIED COATINGS - A 12 TO 14 MILL COATING OF POLY-UREA OR COAL TAR EPOXY SHALL BE APPLIED AT THE FACTORY TO THE ENTIRE PILE (TOP TO BOTTOM, ALL SIDES).

b) TOUCH UP COATINGS -TOUCH UP DAMAGED COATING AND UNCOATED AREAS, AFTER ALL WELDING IS COMPLETED, WITH POLY-UREA OR EPOXY COAL TAR AS MANUFACTURED BY "KRYLON" OR "RUST-OLEUM". BRUSH ON 20 MILLS (DFT); TWO COATS, 10 MILS EACH.

## 6) FABRICATION AND WELDING:

a) FABRICATION AND WELDING SHALL BE DONE IN A SHOP SPECIALIZING IN THIS TYPE OF WORK. CONTRACTORS WHO WANT TO PERFORM THIS WORK "IN-HOUSE" WILL BE REQUIRED TO SHOW PROOF OF COMPETENCY. PROOF OF COMPETENCY WILL INCLUDE A DESCRIPTION OF THE LOCATION AND FACILITIES WHERE THE WORK WILL BE PERFORMED, NAMES AND CERTIFICATIONS OF THE INDIVIDUALS WHO WILL PERFORM THE FABRICATION WORK, AND A LIST OF PREVIOUSLY COMPLETED PROJECTS THAT DEMONSTRATE A LEVEL OF COMPETENCY COMMENSURATE WITH THIS PROJECT.
b) CONDUCT WELDING IN THE SHOP TO THE EXTENT POSSIBLE.
c) SHOP WELDING MAY BE DONE BY ELECTRIC ARC USING "STICK" OR "MIG" WELDING EQUIPMENT (FCAW OR GMAW). FIELD WELDING SHALL BE DONE WITH PORTABLE WELDING EQUIPMENT, BY A PERSON WHO IS EXPERIENCED AND LICENSED TO DO THIS TYPE OF WORK USING E 70 XX ELECTRODES.
d) CONDUCT ALL WELDING IN ACCORDANCE WITH AUS D1-1.

## 7) DESIGN LOADS:

a. THIS PROJECT WAS DESIGNED ACCORDING TO THE FOLLOWING LOADS ONLY (NO OTHER LOADS CONSIDERED)

1. VEHICLULAR AASHTO HL 93 (SUBSTRUCTURE ONLY)
2. THE SELF WEIGHT OF THE STRUCTURAL UNITS.
3. VERTICAL EARTH LOADS
4. HORIZONTAL EARTH LOADS BASED ON ACTIVE SAIL CONDITION.
5. LIVE LOAD SURCHARGE EQUAL TO 3.27' OF SOIL WITH A DENSITY OF 110 PCF.

b. STEEL MEMBERS (PILING, PILE CAPS, SHEET PILING & TIE BACKS WERE DESIGNED ACCORDING TO THE AISC CODE 14th EDITION.: ASD
c. REINFORCED CONCRETE PANELS WERE DESIGNED ACCORDING TO THE ACI 318-11 CODE (LOAD FACTOR DESIGN METHOD)

## 8) SUBSURFACE GEOLOGICAL CONDITIONS:

b) THE CONTRACTOR SHALL READ AND BECOME FAMILIAR WITH THE GEOTECHNICAL REPORT PREPARED FOR THIS PROJECT BY SOUTHERN EARTH SCIENCES, INC. (FILE NO. T13-181) WHICH IS APPENDED TO THE BIDDING AND CONTRACT DOCUMENTS.

## 9) CONCRETE AND REBAR:

a) REBAR - USE NON-EPOXY COATED, DEFORMED STEEL BARS, WITH A YIELD STRENGTH OF 60KSI (GRADE 60) CONFORMING TO ASTM A 615M

b) CONCRETE - USE REDI-MIXED PORTLAND CEMENT CONCRETE HAVING A 28 DAY COMPRESSIVE STRENGTH OF 4,000 PSI OR GREATER, PROPORTIONED IN ACCORDANCE WITH ACI 211.1 AND THE FOLLOWING:

i. THE NOMINAL AGGREGATE SIZE IS 1.5 INCHES,
ii. AIR ENTRAINMENT OF 6%,
iii. WATER CEMENT RATIO OF .40 TO .55 AND A MAXIMUM SLUMP LESS THAN 4"
iv. USE ONLY GDOT APPROVED AGGREGATES, FREE OF CLAYEY COATINGS AND AS CLEAN AS POSSIBLE.
v. ADDITIVES: CONCRETE ACCELERATORS AND PLASTICIZERS ARE ALLOWED SUBJECT TO ENGINEER'S APPROVAL. APPLY AN APPROVED CURING COMPOUND TO THE FINISHED SURFACE AS SOON AS POSSIBLE/PRACTICAL FOLLOWING THE FINISHING OPERATIONS.

c) PRE-CAST CONCRETE PANEL CURING - APPLY ANY COMMONLY AVAILABLE CURING COMPOUND WITHIN 12 HOURS OF FINISHING OR, ALTERNATIVELY, KEEP THE ENTIRE CONCRETE SURFACE SATURATED WITH WATER.

PROVIDE PROTECTIVE CONCRETE COVER OVER THE MAIN REINFORCING BARS (THE LONGITUDINAL BARS, NOT THE STIRRUPS) AS FOLLOWS:

- CENTER THE HORIZONTAL REINFORCEMENT BARS IN THE SLAB AND ATTACH THE VERTICAL REINFORCEMENT TO EITHER SIDE OF THE HORIZONTAL REINFORCEMENT.

## 10) H PILE TESTING

AVAILABLE SOILS INFORMATION SUGGESTS THAT A 70' LONG HP 10x57 PILLING JETTED TO WITHIN 30' OF FINAL TIP ELEVATION AND THEN DRIVEN TO THE FINAL BUTT ELEVATION WILL SUFFICE (15 TON AXIAL SERVICE LOAD, 30 TON ULTIMATE). HOWEVER A TEST PILE WILL BE REQUIRED FOR CONFIRMATION PURPOSES.

THE TEST IS TO BE CONDUCTED AS FOLLOWS:

CONTRACTOR WILL ORDER A SINGLE (HP10x57) 70' LONG TEST PILE AND DRIVE IT AS ONE OF THE VERTICAL PILES (AT EITHER END OF THE BRIDGE) WHILE SIMULTANEOUSLY CONDUCTING A PDA TEST. SUBSEQUENTLY, A CAP-WAP ANALYSIS OF THE PDA TEST RESULTS, WILL BE USED TO CONFIRM THE LENGTH OF THE PRODUCTION PILES, THE AMOUNT OF JETTING ALLOWED AND "REFUSAL" DRIVING RESISTANCE FOR THE PILE. IF PRODUCTION PILE LENGTH DIFFERS FROM THE 70' (ASSUMED LENGTH) THE CONTRACT PRICE WILL BE ADJUSTED ACCORDING TO THE UNIT PRICE LISTED IN THE BID SCHEDULE, EITHER AS ADDITIVE (IF THE PILES ARE LONGER) OR DEDUCTIVE (IF PILES ARE SHORTER).

THE COST OF THE PDA TEST CAP-WAP ANALYSIS IS TO BE INCLUDED IN THE CONTRACTORS BID.

IT IS EXPECTED THAT THE TEST PILE WILL REMAIN IN PLACE AND USED AS PART OF THE FINAL STRUCTURE.

H PILES MAY BE DRIVEN WITH DIESEL, AIR OR HYDRAULIC HAMMERS (NO DROP HAMMERS) WITH A MINIMUM RATED CAPACITY OF 15,000 FT. LB. DIESEL AND AIR HAMMERS MUST USE ENVIRONMENTALLY FRIENDLY FUELS AND LUBRICANTS.

January 22, 2014 (10:50:21 EST)
C:\USERS\DAHLENB\APPDATA\LOCAL\TEMP\ACPUBLISH_18808\SURF ROAD-DSGNR001.DWG

PREBLE-RISH, INC. ALL RIGHTS RESERVED. NO PART OF THIS DOCUMENT MAY BE REPRODUCED OR UTILIZED IN ANY FORM WITHOUT PRIOR WRITTEN AUTHORIZATION OF PREBLE-RISH, INC.

EB# 0006155

| NO. | DATE: | APPR. | REVISION: |
|---|---|---|---|
| 1. | 1/21/14 | | REVISED NOTES |

SURF ROAD NRCS
STRUCTURAL NOTES

PREBLE-RISH INC
CONSULTING ENGINEERS AND SURVEYORS
CIVIL • SURVEYING • SITE PLANNING
36 JASPER THOMAS ROAD, CRAWFORDVILLE, FL 32327

WAKULLA COUNTY
BOARD OF COUNTY COMMISSIONERS
WAKULLA COUNTY, FLORIDA

| | |
|---|---|
| DATE: JAN. 2013 | PROJECT NO. 203.108 |
| SCALE: As Shown | |
| DRAWN: BDD | SHEET C2.1 |
| CHECKED: | |

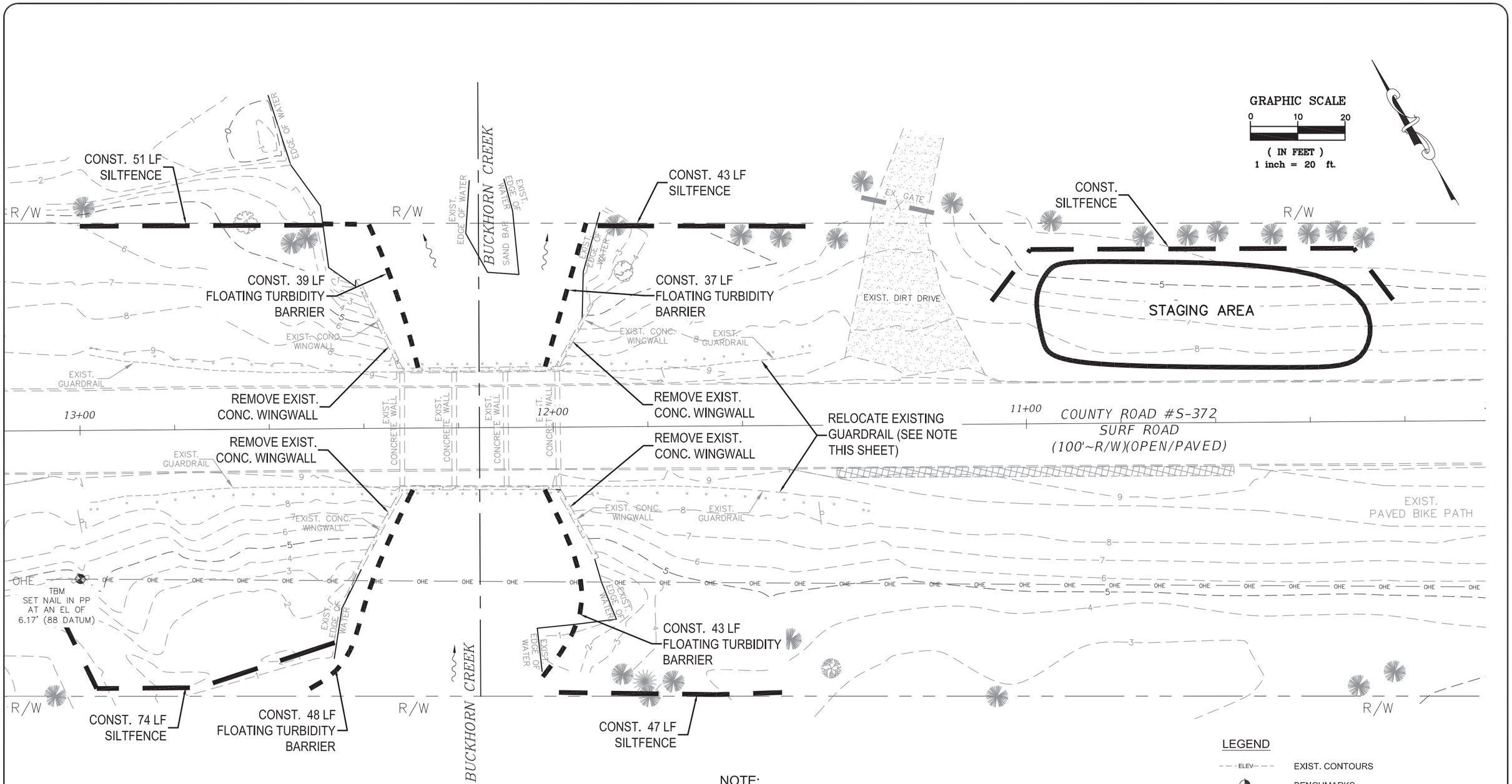


NOTE:
CONTRACTOR SHALL CAREFULLY REMOVE GUARDRAIL AND STOCK PILE FOR FUTURE RE-USE.

LEGEND

- EXIST. CONTOURS
- BENCHMARKS
- FLOATING TURBIDITY BARRIER
- SILTFENCE
- FLOW ARROW

PREBLE-RISH, INC. ALL RIGHTS RESERVED. NO PART OF THIS DOCUMENT MAY BE REPRODUCED OR UTILIZED IN ANY FORM WITHOUT PRIOR WRITTEN AUTHORIZATION OF PREBLE-RISH, INC.

EB# 0006155

| NO. | DATE: | APPR. | REVISION: |
|---|---|---|---|
| 1 | 1/21/14 | | REVISED LABELING, ADDED LEGEND AND CHANGED TEXT SIZE |

# SURF ROAD NRCS
# EXISTING CONDITIONS/EROSION CONTROL DEMOLITION PLAN

PREBLE-RISH INC
CONSULTING ENGINEERS AND SURVEYORS
CIVIL • SURVEYING • SITE PLANNING
36 JASPER THOMAS ROAD, CRAWFORDVILLE, FL 32327

WAKULLA COUNTY
BOARD OF COUNTY COMMISSIONERS
WAKULLA COUNTY, FLORIDA

DATE: JAN. 2013
SCALE: As Shown
DRAWN: BDD
CHECKED:
PROJECT NO. 203.108
SHEET C3

Thursday, October 03, 2013 7:48:13 AM
C:\Civil 3D Projects\203-108 Surf Rd\roadway\Surf Road-DSGNRD01.dwg

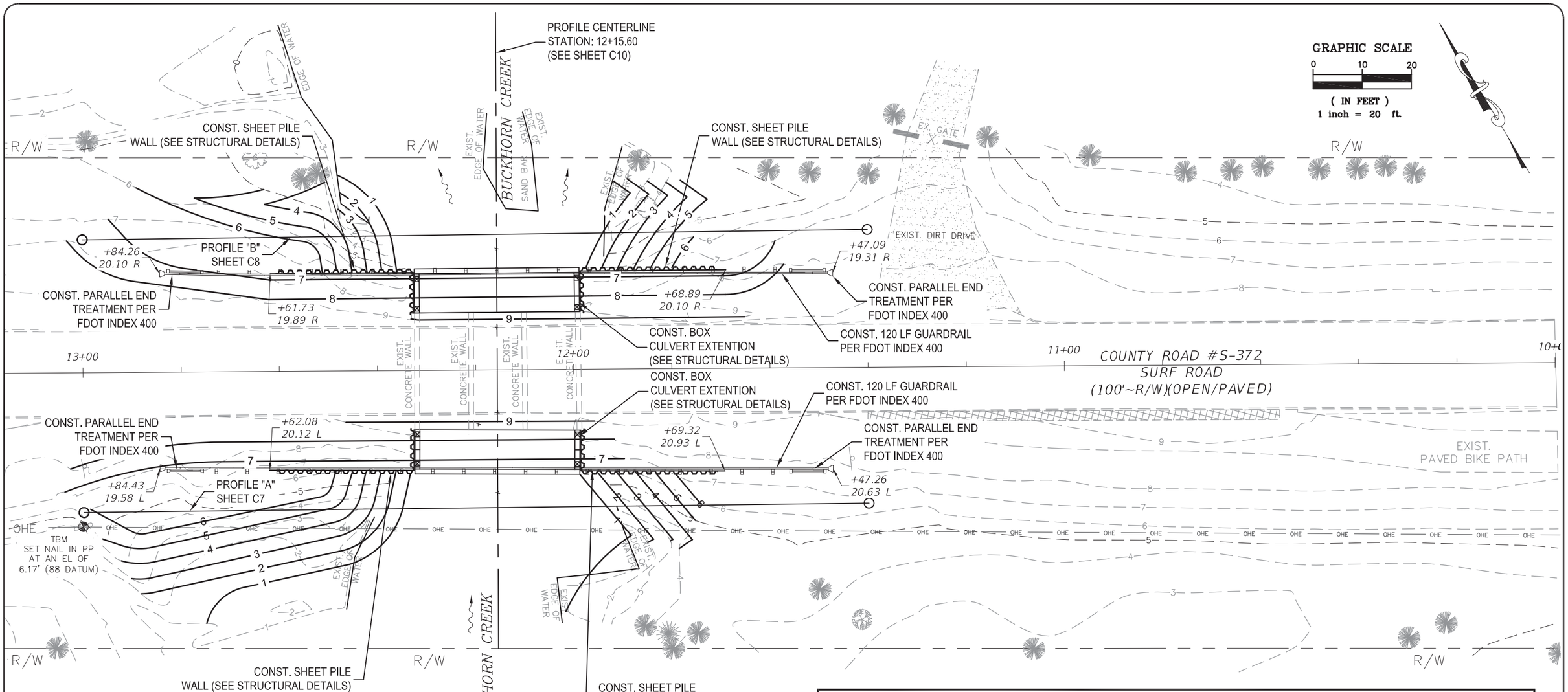


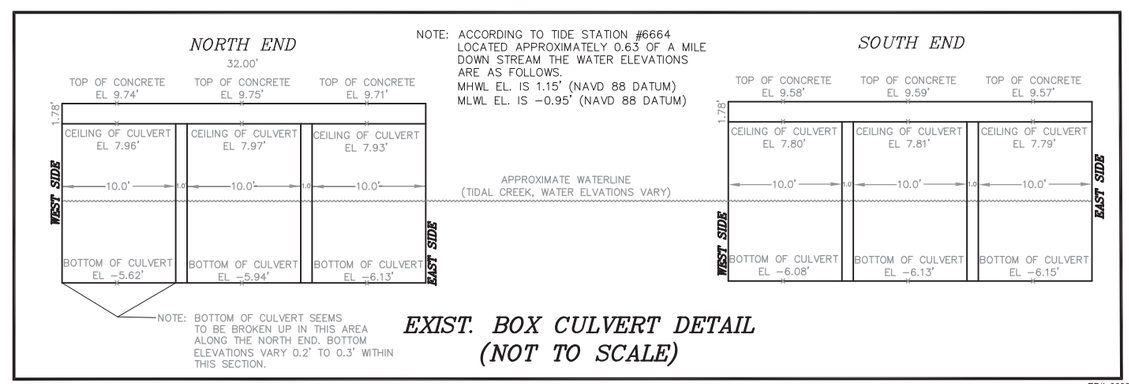


EXIST. BOX CULVERT DETAIL
(NOT TO SCALE)

## LEGEND

- ELEV — PROPOSED CONTOURS
- ELEV - - EXISTING CONTOURS
- BENCHMARKS
- FLOW ARROW

PREBLE-RISH, INC. ALL RIGHTS RESERVED. NO PART OF THIS DOCUMENT MAY BE REPRODUCED OR UTILIZED IN ANY FORM WITHOUT PRIOR WRITTEN AUTHORIZATION OF PREBLE-RISH, INC.

EB# 0006155

| NO. | DATE: | APPR. | REVISION: |
|---|---|---|---|
| 1 | 1/21/14 | | REVISED LABELING, GUARDRAIL, ADDED LEGEND AND STATION OFFSETS |

# SURF ROAD NRCS
# SITE PLAN/GRADING

PREBLE-RISH INC
CONSULTING ENGINEERS AND SURVEYORS
CIVIL • SURVEYING • SITE PLANNING
36 JASPER THOMAS ROAD, CRAWFORDVILLE, FL 32327

WAKULLA COUNTY
BOARD OF COUNTY COMMISSIONERS
WAKULLA COUNTY, FLORIDA

DATE: JAN. 2013
SCALE: As Shown
DRAWN: BDD
CHECKED:
PROJECT NO. 203.108
SHEET C4

Thursday, October 03, 2013 7:48:01 AM
C:\CM\3D Projects\203.108 Surf Rd\roadway\Surf Road-S\SGNR001.dwg

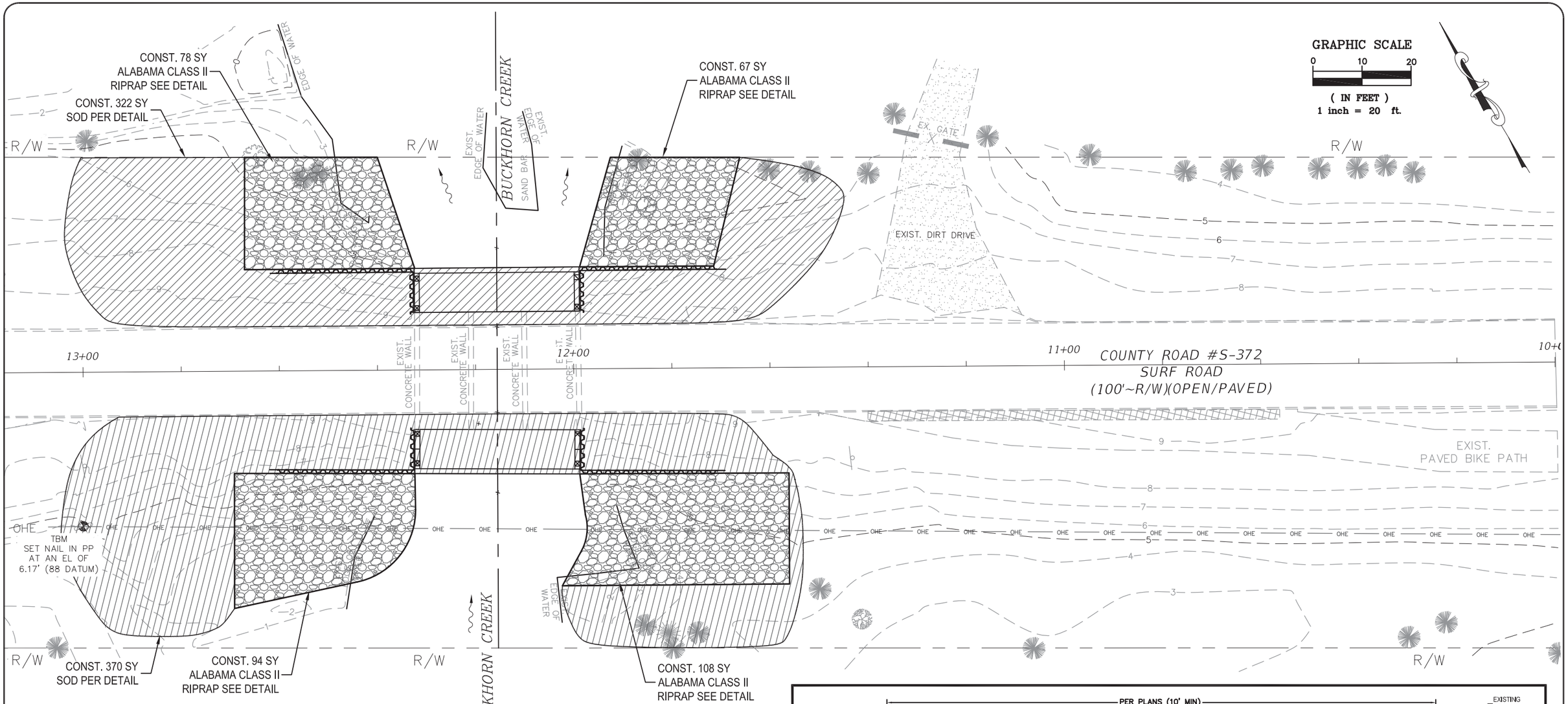


## LEGEND

- EXISTING CONTOURS
- BENCHMARKS
- FLOATING TURBIDITY BARRIER
- SILTFENCE
- FLOW ARROW
- SODDED AREAS
- RIPRAP AREAS

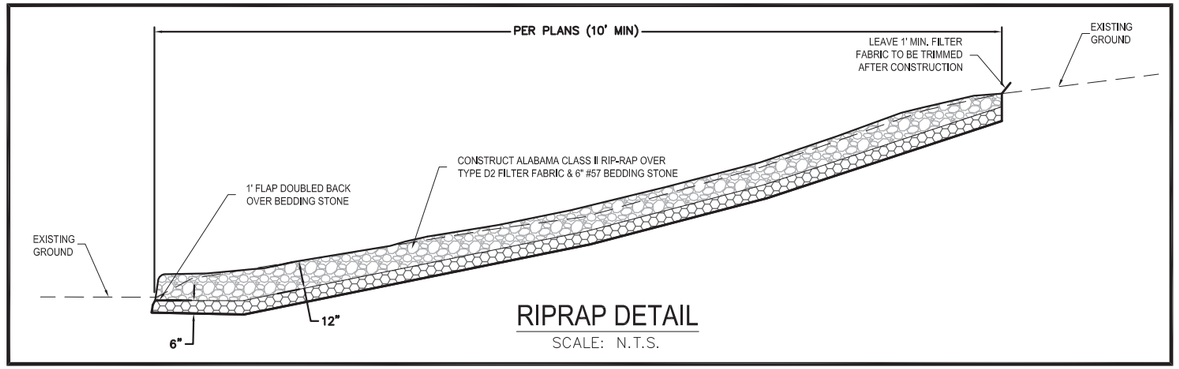


## RIPRAP DETAIL

SCALE: N.T.S.

PREBLE-RISH, INC. ALL RIGHTS RESERVED. NO PART OF THIS DOCUMENT MAY BE REPRODUCED OR UTILIZED IN ANY FORM WITHOUT PRIOR WRITTEN AUTHORIZATION OF PREBLE-RISH, INC.

EB# 0006155

| NO. | DATE: | APPR. | REVISION: |
|---|---|---|---|
| 1 | 1/21/14 | | ADDED LEGEND AND CHANGED TEXT SIZE |

# SURF ROAD NRCS
# SOD AND RIPRAP LAYOUT

PREBLE-RISH INC
CONSULTING ENGINEERS AND SURVEYORS
CIVIL • SURVEYING • SITE PLANNING
36 JASPER THOMAS ROAD, CRAWFORDVILLE, FL 32327

WAKULLA COUNTY
BOARD OF COUNTY COMMISSIONERS
WAKULLA COUNTY, FLORIDA

| | |
|---|---|
| DATE: JAN. 2013 | PROJECT NO. 203.108 |
| SCALE: As Shown | |
| DRAWN: BDD | SHEET C5 |
| CHECKED: | |

Thursday, October 03, 2013 7:48:01 AM
C:\Civil 3D Projects\203.108 Surf Rd\roadway\Surf Road-DSGNRD01.dwg

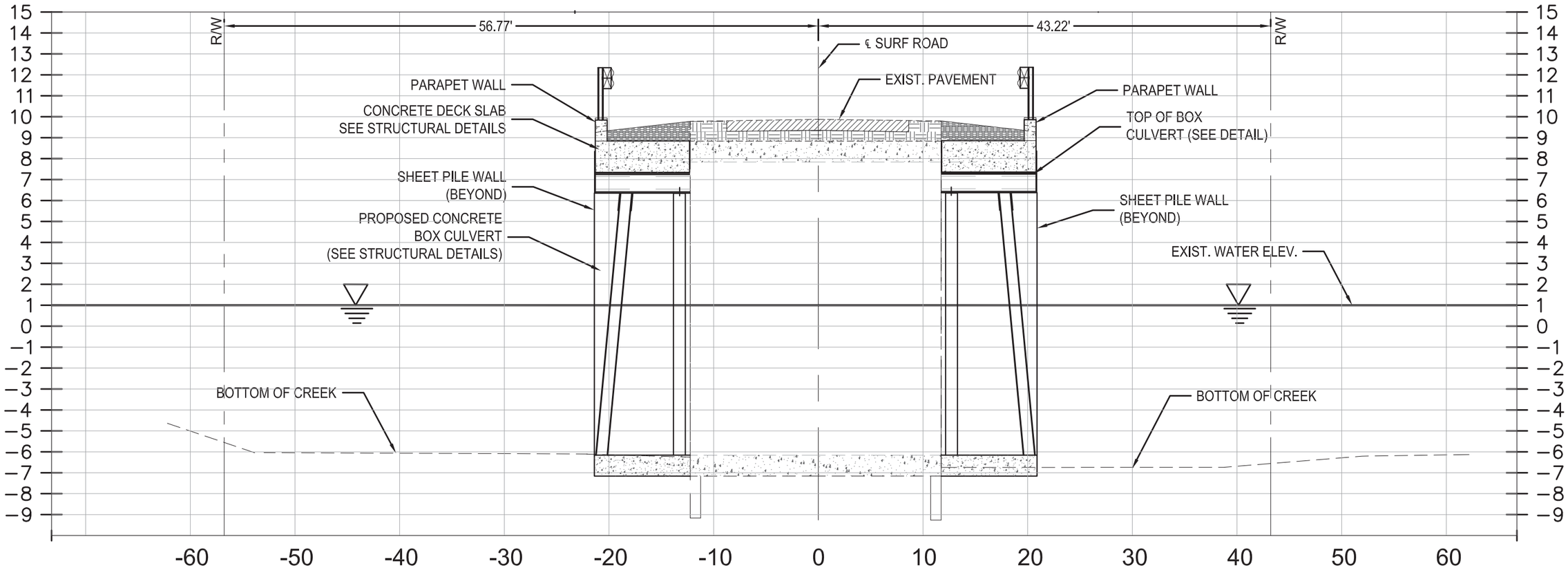


## CROSS SECTION @ STA.: 12+15.60

SCALE:
1"=10' HOR.
1"=5' VERT.

PREBLE-RISH, INC. ALL RIGHTS RESERVED. NO PART OF THIS DOCUMENT MAY BE REPRODUCED OR UTILIZED IN ANY FORM WITHOUT PRIOR WRITTEN AUTHORIZATION OF PREBLE-RISH, INC.

EB# 0006155

Monday, September 23, 2013 8:10:21 AM
C:\Civil 3D Projects\203.108 Surf Rd\roadway\Surf Road-DSGNRD01.dwg

| NO. | DATE: | APPR. | REVISION: |
|---|---|---|---|
| 1 | | | |
| 2 | | | |
| 3 | | | |

SURF ROAD NRCS
ROADWAY SECTION

PREBLE-RISH INC
CONSULTING ENGINEERS AND SURVEYORS
CIVIL • SURVEYING • SITE PLANNING
36 JASPER THOMAS ROAD, CRAWFORDVILLE, FL 32327

WAKULLA COUNTY
BOARD OF COUNTY COMMISSIONERS
WAKULLA COUNTY, FLORIDA

| | |
|---|---|
| DATE: JAN. 2013 | PROJECT NO. 203.108 |
| SCALE: As Shown | |
| DRAWN: BDD | SHEET |
| CHECKED: | C6 |

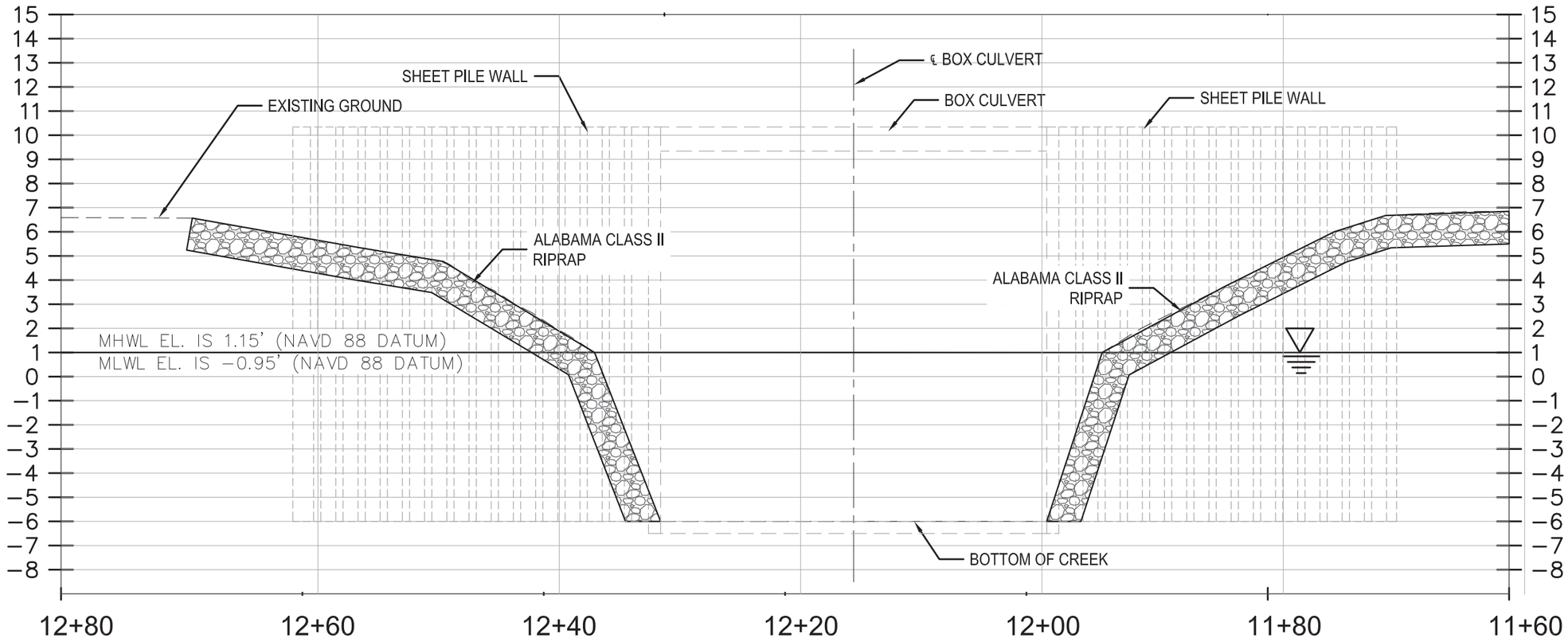


# PROFILE "A"

SCALE:
1"=10' HOR.
1"=5' VERT.

PREBLE-RISH, INC. ALL RIGHTS RESERVED. NO PART OF THIS DOCUMENT MAY BE REPRODUCED OR UTILIZED IN ANY FORM WITHOUT PRIOR WRITTEN AUTHORIZATION OF PREBLE-RISH, INC.

EB# 0006155

Thursday, October 03, 2013 2:52:19 PM
C:\Civil 3D Projects\203.108 Surf Rd\roadway\Surf Road-DSGNRD01.dwg

| NO. | DATE: | APPR. | REVISION: |
|---|---|---|---|
| 1 | | | |
| 2 | | | |
| 3 | | | |

SURF ROAD NRCS
PROFILE "A"

PREBLE-RISH INC
CONSULTING ENGINEERS AND SURVEYORS
CIVIL • SURVEYING • SITE PLANNING
36 JASPER THOMAS ROAD, CRAWFORDVILLE, FL 32327

WAKULLA COUNTY
BOARD OF COUNTY COMMISSIONERS
WAKULLA COUNTY, FLORIDA

DATE: JAN. 2013
SCALE: As Shown
DRAWN: BDD
CHECKED:
PROJECT NO. 203.108
SHEET C7

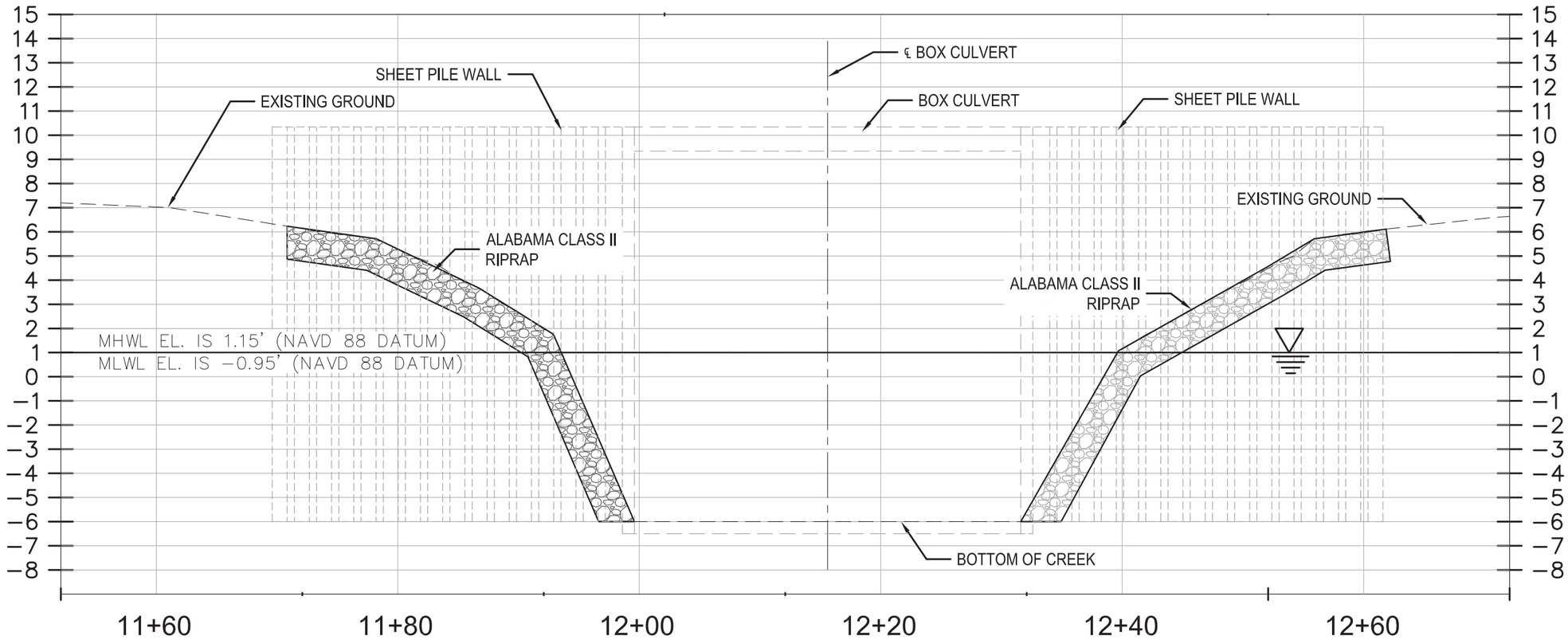


# PROFILE "B"

SCALE:
1"=10' HOR.
1"=5' VERT.

Thursday, October 03, 2013 2:56:19 PM
C:\Civil 3D Projects\203.108 Surf Rd\roadway\Surf Road-DSGNRD01.dwg

PREBLE-RISH, INC. ALL RIGHTS RESERVED. NO PART OF THIS DOCUMENT MAY BE REPRODUCED OR UTILIZED IN ANY FORM WITHOUT PRIOR WRITTEN AUTHORIZATION OF PREBLE-RISH, INC.

EB# 0006155

| NO. | DATE: | APPR. | REVISION: |
|---|---|---|---|
| 1 | | | |
| 2 | | | |
| 3 | | | |

SURF ROAD NRCS
PROFILE "B"

PREBLE-RISH INC
CONSULTING ENGINEERS AND SURVEYORS
CIVIL • SURVEYING • SITE PLANNING
36 JASPER THOMAS ROAD, CRAWFORDVILLE, FL 32327

WAKULLA COUNTY
BOARD OF COUNTY COMMISSIONERS
WAKULLA COUNTY, FLORIDA

| | |
|---|---|
| DATE: JAN. 2013 | PROJECT NO. 203.108 |
| SCALE: As Shown | |
| DRAWN: BDD | SHEET C8 |
| CHECKED: | |

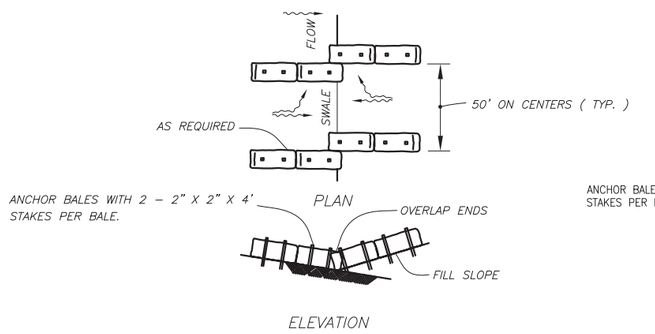


TO BE USED AT SELECTED SITES WHERE THE NATURAL GROUND SLOPES TOWARD THE TOE OF SLOPE

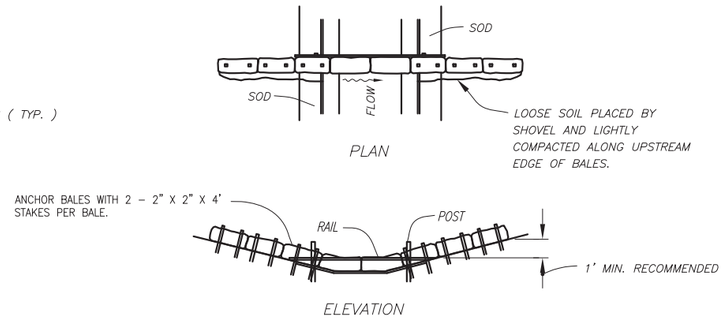


SPACING: BALE BARRIERS FOR PAVED DITCHES SHOULD BE SPACED IN ACCORDANCE WITH CHART I, SHEET 1 OF 3, INDEX NO. 102

## BARRIER FOR PAVED DITCH

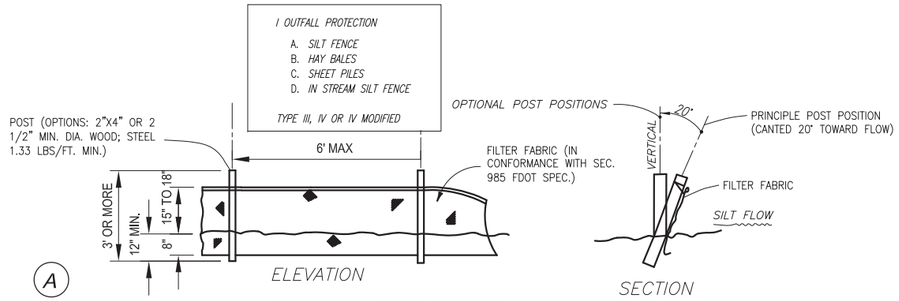


## TYPE III SILT FENCE

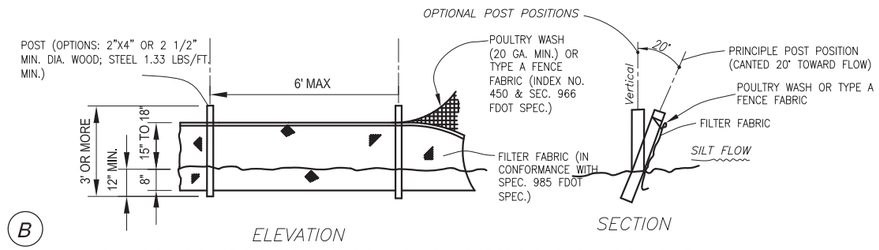


NOTE: SILT FENCE TO BE PAID FOR UNDER THE CONTRACT UNIT PRICE FOR STAKED SILT FENCE (LF).

## TYPE IV SILT FENCE

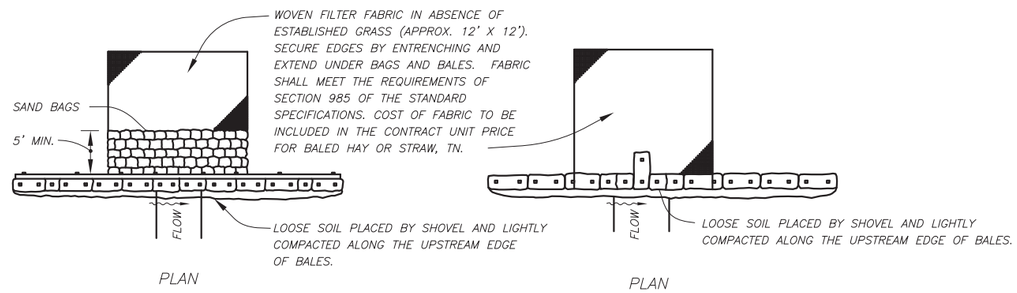


ANCHOR LOWER BALES WITH 2 – 2" X 2" X 4' STAKES PER BALE.
ANCHOR TOP BALES TO LOWER BALES WITH 2 – 2" X 2" X 4' STAKES PER BALE.

ELEVATION

ANCHOR BALES WITH 2 – 2" X 2" X 4' STAKES PER BALE

ELEVATION

APPLICATION AND SPACING: THE USE OF TYPES I & II BALE BARRIERS SHOULD BE LIMITED TO THE CONDITIONS OUTLINED IN CHART I, SHEET 1 OF 3, INDEX NO. 102

TYPE II

TYPE I

## BARRIER FOR UNPAVED DITCHES

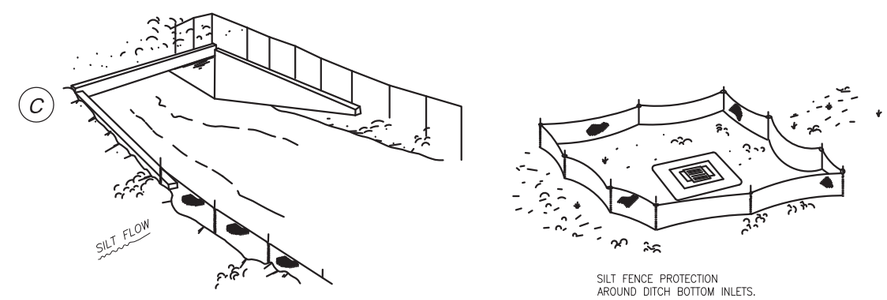


DO NOT DEPLOY IN A MANNER THAT SILT FENCES WILL ACT AS A DAM ACROSS PERMANENT FLOWING WATERCOURSES. SILT FENCES ARE TO BE USED AT UPLAND LOCATIONS AND TURBIDITY BARRIERS USED AT PERMANENT BODIES OF WATER.

## SILT FENCE APPLICATIONS

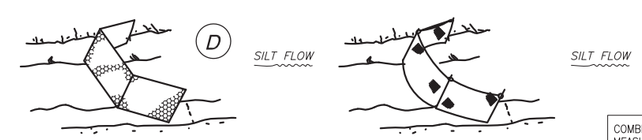


TYPE IV SILT FENCE

TYPE III SILT FENCE

NOTE: SPACING FOR TYPE III AND TYPE IV FENCES TO BE IN ACCORDANCE WITH CHART 1, SHEET 1 OF 3 AND DITCH CONST. ATIONS AT DRAINAGE STRUCTURES SHEET 2 OF 3.

COMBINATIONS OF EROSION CONTROL MEASURES MAY BE NECESSARY. REFER TO 1998 DOT ROADWAY AND TRAFFIC DESIGN STANDARDS. INDEX NOS. 100 THROUGH 104 FOR FURTHER DETAILS ON THESE AND OTHER EROSION AND SEDIMENT CONTROL MEASURES.

PREBLE-RISH, INC. ALL RIGHTS RESERVED. NO PART OF THIS DOCUMENT MAY BE REPRODUCED OR UTILIZED IN ANY FORM WITHOUT PRIOR WRITTEN AUTHORIZATION OF PREBLE-RISH, INC.

EB# 0006155

| NO. | DATE: | APPR. | REVISION: |
|---|---|---|---|
| 1 | | | |
| 2 | | | |
| 3 | | | |

SURF ROAD NRCS
EROSION CONTROL DETAILS

PREBLE-RISH INC
CONSULTING ENGINEERS AND SURVEYORS
CIVIL • SURVEYING • SITE PLANNING
36 JASPER THOMAS ROAD, CRAWFORDVILLE, FL 32327

WAKULLA COUNTY
BOARD OF COUNTY COMMISSIONERS
WAKULLA COUNTY, FLORIDA

DATE: JAN. 2013
SCALE: As Shown
DRAWN: BDD
CHECKED:
PROJECT NO. 203.108
SHEET C9

Monday, September 23, 2013 8:10:21 AM
C:\Civil 3D Projects\203.108 Surf Rd\roadway\Surf Road-DSGNRD01.dwg

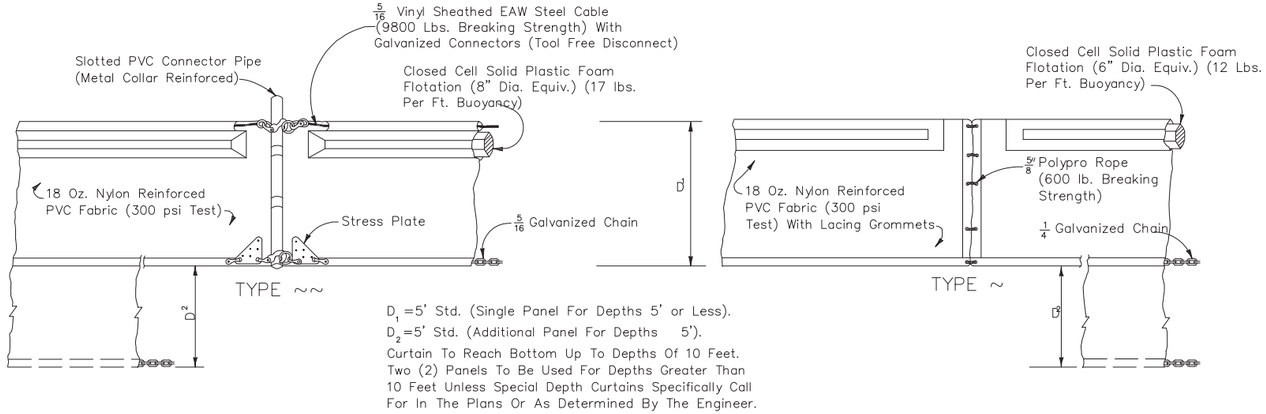


$D_1$ =5' Std. (Single Panel For Depths 5' or Less).
$D_2$ =5' Std. (Additional Panel For Depths 5').
Curtain To Reach Bottom Up To Depths Of 10 Feet. Two (2) Panels To Be Used For Depths Greater Than 10 Feet Unless Special Depth Curtains Specifically Call For In The Plans Or As Determined By The Engineer.

NOTICE: COMPONENTS OF TYPES ~ AND ~~ MAY BE SIMILAR OR IDENTICAL TO PROPRIETARY DESIGNS. ANY INFRINGEMENT ON THE PROPRIETARY RIGHTS OF THE DESIGNER SHALL BE THE SOLE RESPONSIBILITY OF THE USER. SUBSTITUTIONS FOR TYPES ~ AND ~~ SHALL BE AS APPROVED BY THE ENGINEER.

## FLOATING TURBIDITY BARRIERS

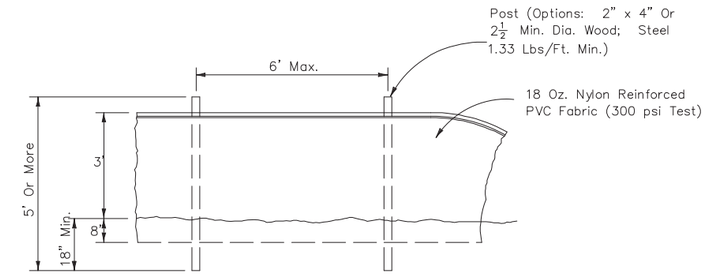


## STAKED TURBIDITY BARRIER

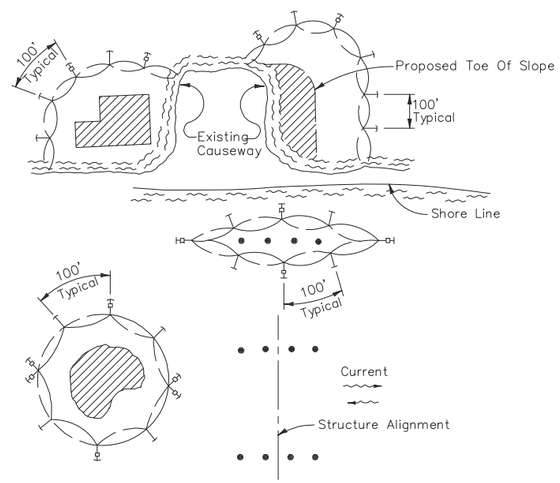


LEGEND

- Pile Locations
- Dredge Or Fill Area
- Mooring Buoy w/Anchor
- Anchor
- Barrier Movement Due To Current Action

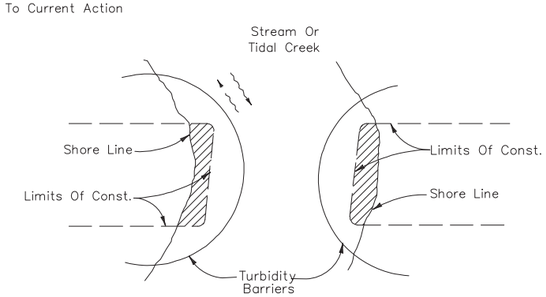


NOTES:

1. Turbidity barriers are to be used in all permanent bodies of water regardless of water depth.
2. Number and spacing of anchors dependent on current velocities.
3. Deployment of barrier around pile locations may vary to accommodate construction operations.
4. Navigation may require segmenting barrier during construction operations.
5. For additional information see Section 104 of the Standard Specifications.

Note:
Turbidity barriers for flowing streams and tidal creeks may be either floating, or staked types or any combinations of types that will suit site conditions and meet erosion control and water quality requirements. The barrier type(s) will be at the Contractors option unless otherwise specified in the plans, however payment will be under the pay item(s) established in the plans for Floating Turbidity Barrier and/or Staked Turbidity Barrier. Posts in staked turbidity barriers to be CONST. ed in vertical position unless otherwise directed by the Engineer.

## TURBIDITY BARRIER APPLICATIONS

GENERAL NOTES

1. Floating turbidity barriers are to be paid for under the contract unit price for Floating Turbidity Barrier, LF.
2. Staked turbidity barriers are to be paid for under the contrac unit price for Staked Turbidity Barrier, LF.

PREBLE-RISH, INC. ALL RIGHTS RESERVED. NO PART OF THIS DOCUMENT MAY BE REPRODUCED OR UTILIZED IN ANY FORM WITHOUT PRIOR WRITTEN AUTHORIZATION OF PREBLE-RISH, INC.

| NO. | DATE: | APPR. | REVISION: |
|---|---|---|---|
| 1 | | | |
| 2 | | | |
| 3 | | | |

# SURF ROAD NRCS EROSION CONTROL DETAILS

PREBLE-RISH INC
CONSULTING ENGINEERS AND SURVEYORS
CIVIL • SURVEYING • SITE PLANNING
36 JASPER THOMAS ROAD, CRAWFORDVILLE, FL 32327

WAKULLA COUNTY
BOARD OF COUNTY COMMISSIONERS
WAKULLA COUNTY, FLORIDA

| | |
|---|---|
| DATE: JAN. 2013 | PROJECT NO. 203.108 |
| SCALE: As Shown | |
| DRAWN: BDD | SHEET C10 |
| CHECKED: | |

Thursday, October 03, 2013 2:59:19 PM
C:\Civil 3D Projects\203.108 Surf Rd\roadway\Surf Road-DS\GNRD01.dwg

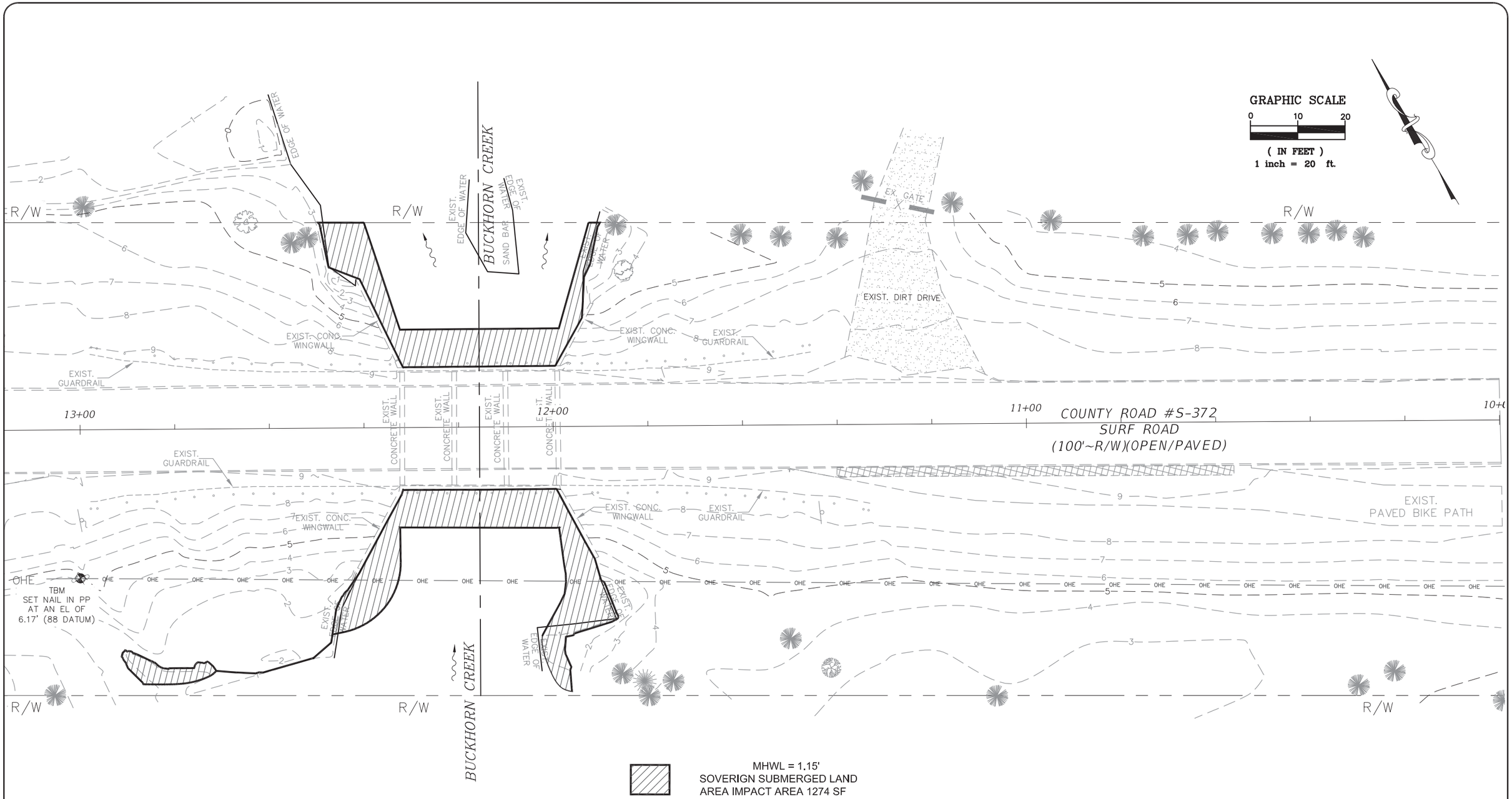


PREBLE-RISH, INC. ALL RIGHTS RESERVED. NO PART OF THIS DOCUMENT MAY BE REPRODUCED OR UTILIZED IN ANY FORM WITHOUT PRIOR WRITTEN AUTHORIZATION OF PREBLE-RISH, INC.

EB# 0006155

| NO. | DATE: | APPR. | REVISION: |
|---|---|---|---|
| 1 | | | |
| 2 | | | |
| 3 | | | |

# SURF ROAD NRCS
# SOVERIGN SUBMERGED LAND EXHIBIT

PREBLE-RISH INC
CONSULTING ENGINEERS AND SURVEYORS
CIVIL • SURVEYING • SITE PLANNING
36 JASPER THOMAS ROAD, CRAWFORDVILLE, FL 32327

WAKULLA COUNTY
BOARD OF COUNTY COMMISSIONERS
WAKULLA COUNTY, FLORIDA

| | |
|---|---|
| DATE: JAN. 2013 | PROJECT NO. 203.108 |
| SCALE: As Shown | |
| DRAWN: BDD | SHEET |
| CHECKED: | C11 |

Thursday, October 03, 2013 7:45:01 AM
C:\CIM 3D Projects\203.108 Surf Rd\roadway\Surf Road-DSGNRD01.dwg

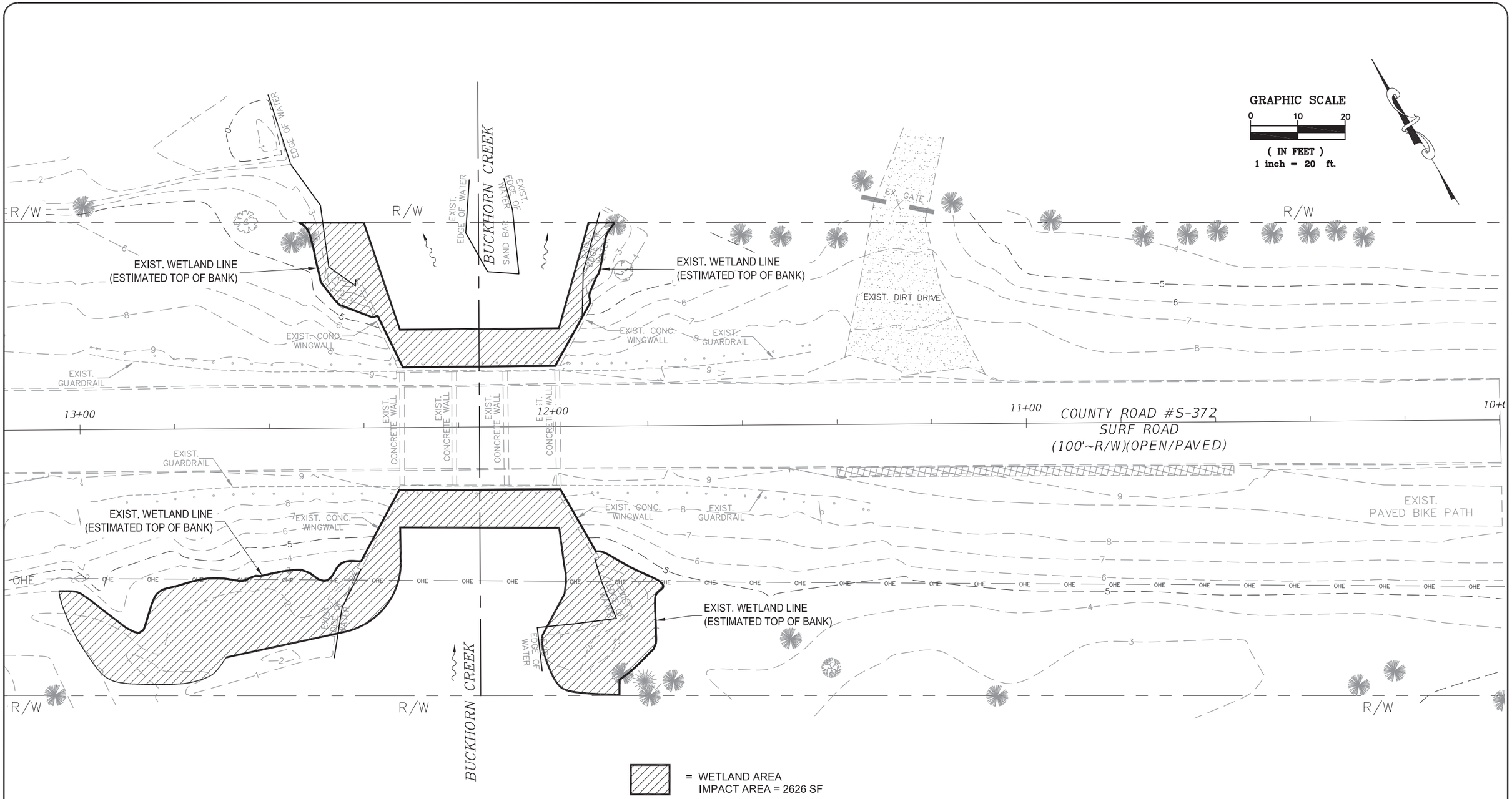


PREBLE-RISH, INC. ALL RIGHTS RESERVED. NO PART OF THIS DOCUMENT MAY BE REPRODUCED OR UTILIZED IN ANY FORM WITHOUT PRIOR WRITTEN AUTHORIZATION OF PREBLE-RISH, INC.

EB# 0006155

| NO. | DATE: | APPR. | REVISION: |
|---|---|---|---|
| 1 | | | |
| 2 | | | |
| 3 | | | |

# SURF ROAD NRCS WETLAND EXHIBIT

PREBLE-RISH INC
CONSULTING ENGINEERS AND SURVEYORS
CIVIL • SURVEYING • SITE PLANNING
36 JASPER THOMAS ROAD, CRAWFORDVILLE, FL 32327

WAKULLA COUNTY
BOARD OF COUNTY COMMISSIONERS
WAKULLA COUNTY, FLORIDA

| | |
|---|---|
| DATE: JAN. 2013 | PROJECT NO. 203.108 |
| SCALE: As Shown | |
| DRAWN: BDD | SHEET C12 |
| CHECKED: | |

Thursday, October 03, 2013 7:45:01 AM
C:\CIM 3D Projects\203.108 Surf Rd\roadway\Surf Road-DSGNRD01.dwg

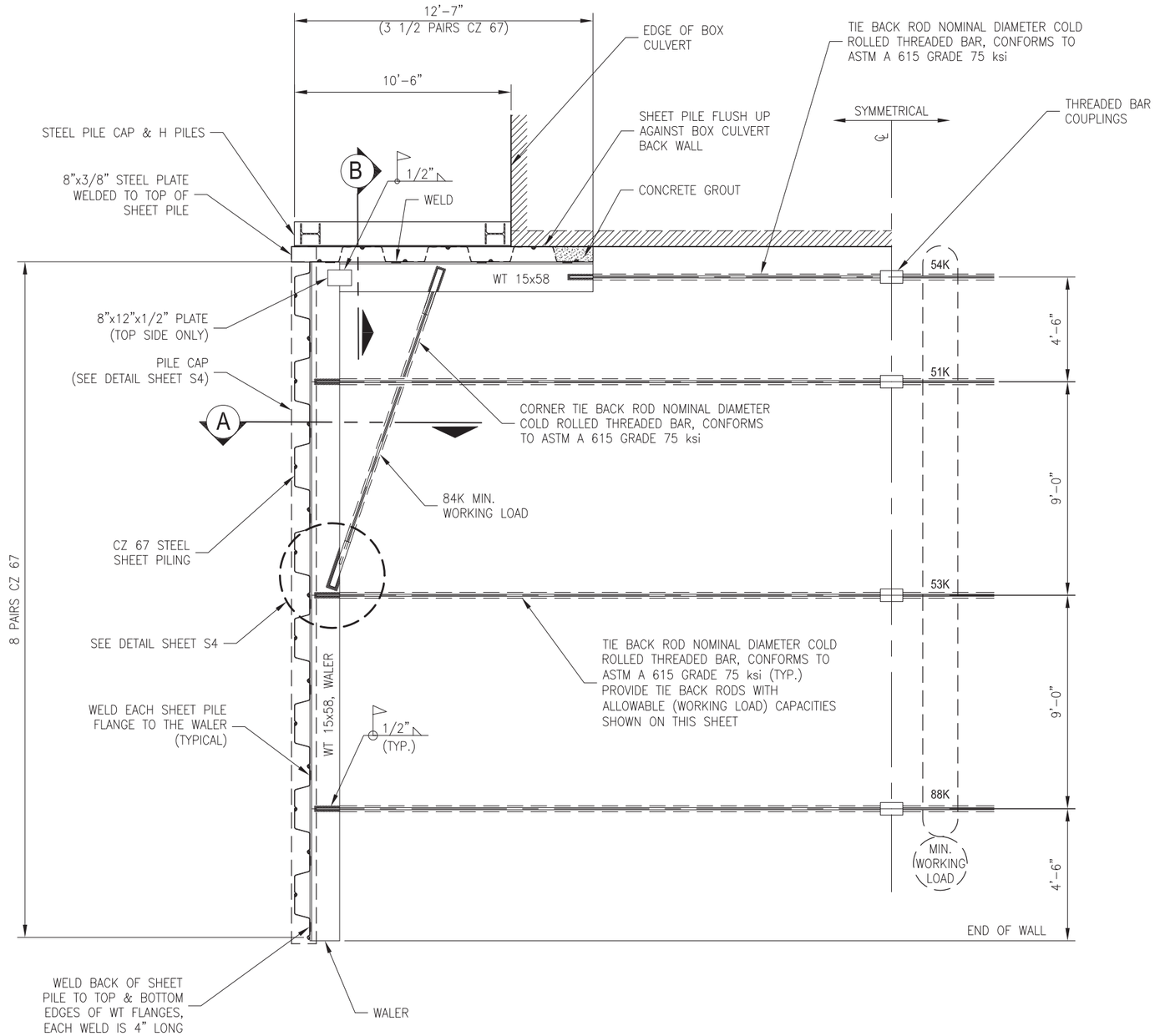


## PLAN VIEW

SCALE: 3/16"=1'-0"

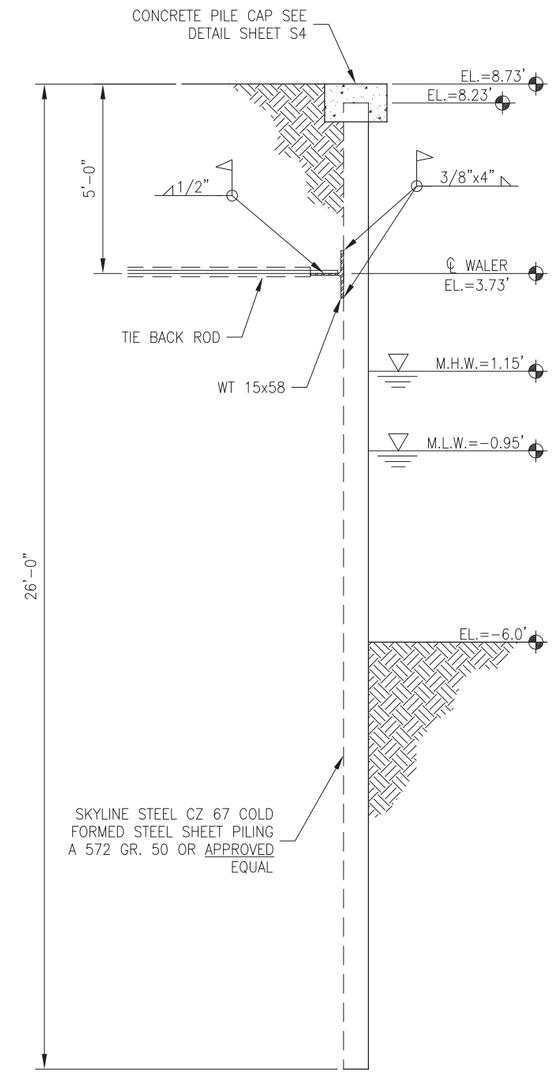


## SECTION "A-A"

SCALE: 1/4"=1'-0"

NOTE:
PROVIDE THREADED BARS WITH STANDARD .035" THICK PVC TUBES. COAT EXPOSED END WITH EPOXY COAL TAR AFTER WELDING/INSTALLATION 2 COATS, 10 mill DFT PER COAT.

PREBLE-RISH, INC. ALL RIGHTS RESERVED. NO PART OF THIS DOCUMENT MAY BE REPRODUCED OR UTILIZED IN ANY FORM WITHOUT PRIOR WRITTEN AUTHORIZATION OF PREBLE-RISH, INC.

EB# 0006155

| NO. | DATE: | APPR. | REVISION: |
|---|---|---|---|
| | | | |
| | | | |
| | | | |
| | | | |

# SURF ROAD NRCS
## SHEET PILE LAYOUT & TYPICAL SECTIONS

PREBLE-RISH INC
CONSULTING ENGINEERS AND SURVEYORS
CIVIL • SURVEYING • SITE PLANNING
36 JASPER THOMAS ROAD, CRAWFORDVILLE, FL 32327

WAKULLA COUNTY
BOARD OF COUNTY COMMISSIONERS
WAKULLA COUNTY, FLORIDA

| | |
|---|---|
| DATE: JAN. 2014 | PROJECT NO. 203.108 |
| SCALE: AS NOTED | |
| DRAWN: L. EVERS | SHEET S1 |
| CHECKED: | |

January 23, 2014 (12:37:16 EST)
K:\203.108 SURF ROAD NRCS\CIVIL3DFOLDER_PRODUCTION\STRUCTURAL DETAILS (SURF ROAD).DWG

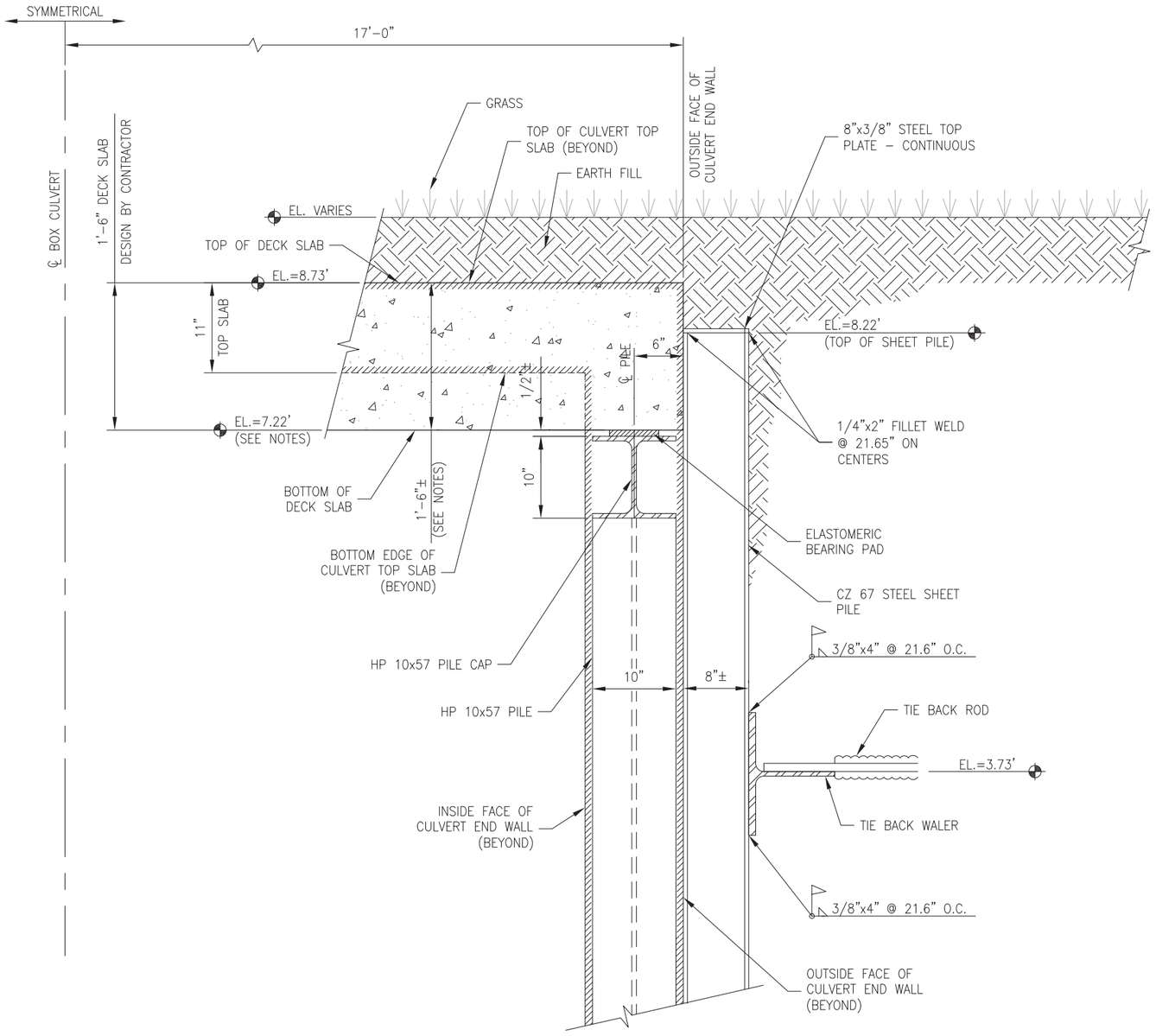


## SECTION "B-B"

SCALE: 3/4"=1'-0"

NOTES

1. BOTTOM OF DECK SLAB ELEVATION IS BASED ON AN ASSUMED 18" THICKNESS. IF ALTERNATE TYPE OF DECK IS USED THIS ELEVATION MUST BE ADJUSTED.
2. CONTRACTOR SHALL PROVIDE DETAILED DRAWINGS OF THE BRIDGE DECK HE INTENDS TO USE, SIGNED AND SEALED BY A PROFESSIONAL ENGINEER EXPERIENCED IN TYPE OF WORK. THE DESIGN LIVE LOAD MAY BE AASHTO'S HL-93 OR ITS 20-44 AT THE DESIGNERS OPTION, ALL NORMALLY ANTICIPATED LOADS (BRAKING, THERMAL, WIND, EARTH DEAD, ETC.) SHALL BE INCLUDED ALONG WITH THE WEIGHT OF A FUTURE WEARING SURFACE OF 1.5" ASPHALT.
3. USE ONLY PRE-FABRICATED BRIDGE DECKS PRODUCED BY A PCI CERTIFIED PLANT OR OTHER RECOGNIZED PRE-CAST BRIDGE MANUFACTURER. FINAL APPROVAL SHALL BE AT PREBLE-RISH ENGINEERS INC. DISCRETION.

PREBLE-RISH, INC. ALL RIGHTS RESERVED. NO PART OF THIS DOCUMENT MAY BE REPRODUCED OR UTILIZED IN ANY FORM WITHOUT PRIOR WRITTEN AUTHORIZATION OF PREBLE-RISH, INC.

EB# 0006155

| NO. | DATE: | APPR. | REVISION: |
|---|---|---|---|
| | | | |
| | | | |
| | | | |
| | | | |
| | | | |

SURF ROAD NRCS
STRUCTURAL DETAILS

PREBLE-RISH INC
CONSULTING ENGINEERS AND SURVEYORS
CIVIL • SURVEYING • SITE PLANNING
36 JASPER THOMAS ROAD, CRAWFORDVILLE, FL 32327

WAKULLA COUNTY
BOARD OF COUNTY COMMISSIONERS
WAKULLA COUNTY, FLORIDA

| | |
|---|---|
| DATE: JAN. 2014 | PROJECT NO. 203.108 |
| SCALE: AS NOTED | |
| DRAWN: L. EVERS | SHEET S2 |
| CHECKED: | |

January 23, 2014 (12:37:16 EST)
K:\203.108 SURF ROAD NRCS\CIVIL3DFOLDER_PRODUCTION\STRUCTURAL DETAILS (SURF ROAD).DWG

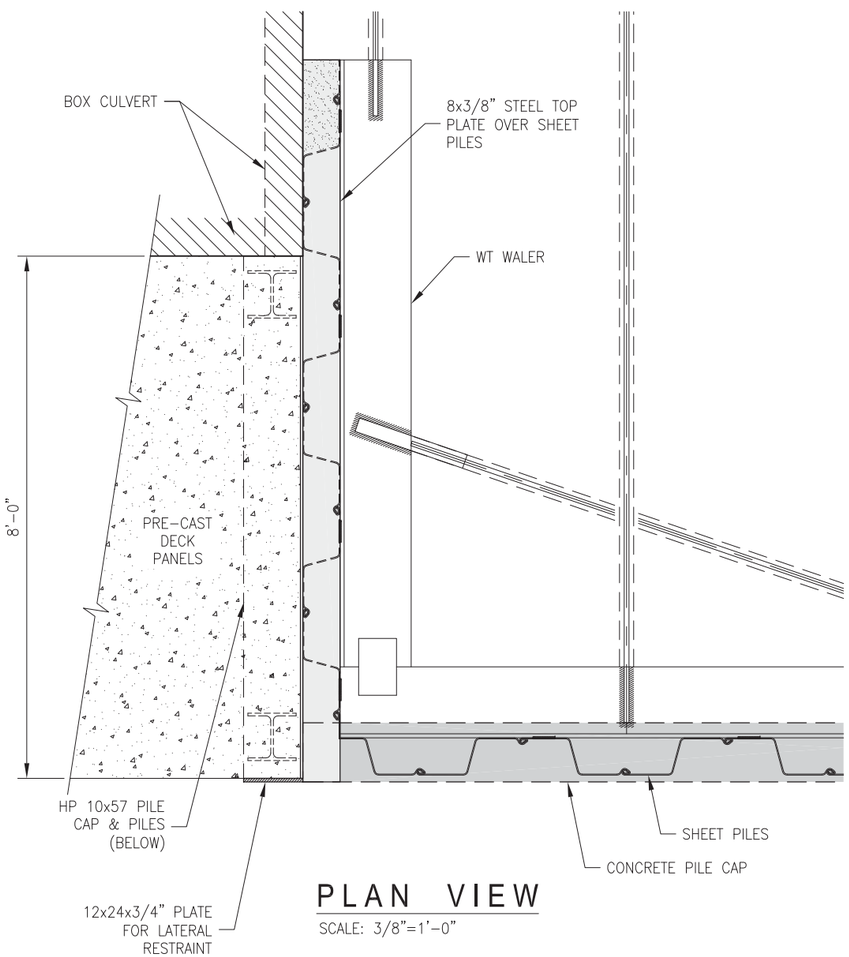


## PLAN VIEW

SCALE: 3/8"=1'-0"

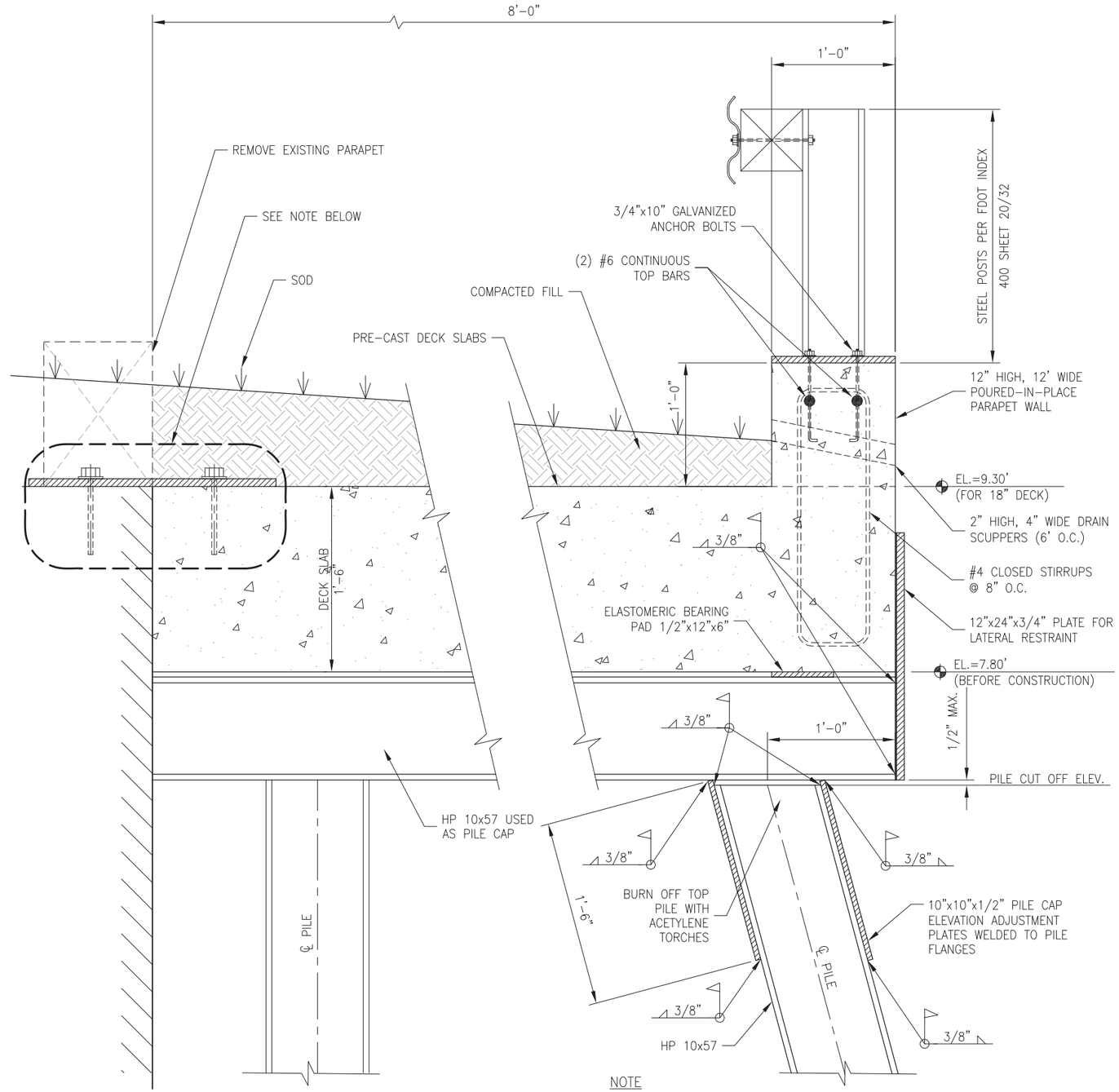


## SECTION

SCALE: 1"=1'-0"

NOTE

THE NEW DECK SLABS SHALL BE SECURELY ATTACHED TO THE EXISTING BOX CULVERT BY MEANS OF 1/2"x6"x24" STEEL PLATES AND 3/4" STAINLESS STEEL BOLTS EPOXIED INTO THE CONCRETE. SEE DETAIL SHEET S4

PREBLE-RISH, INC. ALL RIGHTS RESERVED. NO PART OF THIS DOCUMENT MAY BE REPRODUCED OR UTILIZED IN ANY FORM WITHOUT PRIOR WRITTEN AUTHORIZATION OF PREBLE-RISH, INC.

EB# 0006155

| NO. | DATE: | APPR. | REVISION: |
|---|---|---|---|
| | | | |
| | | | |
| | | | |
| | | | |
| | | | |

SURF ROAD NRCS
STRUCTURAL DETAILS

PREBLE-RISH INC
CONSULTING ENGINEERS AND SURVEYORS
CIVIL • SURVEYING • SITE PLANNING
36 JASPER THOMAS ROAD, CRAWFORDVILLE, FL 32327

WAKULLA COUNTY
BOARD OF COUNTY COMMISSIONERS
WAKULLA COUNTY, FLORIDA

| | |
|---|---|
| DATE: JAN. 2014 | PROJECT NO. 203.108 |
| SCALE: AS NOTED | |
| DRAWN: L. EVERS | SHEET |
| CHECKED: | S3 |

January 23, 2014 (12:37:16 EST)
K:\203.108 SURF ROAD NRCS\CIVIL3DFOLDER_PRODUCTION\STRUCTURAL DETAILS (SURF ROAD).DWG

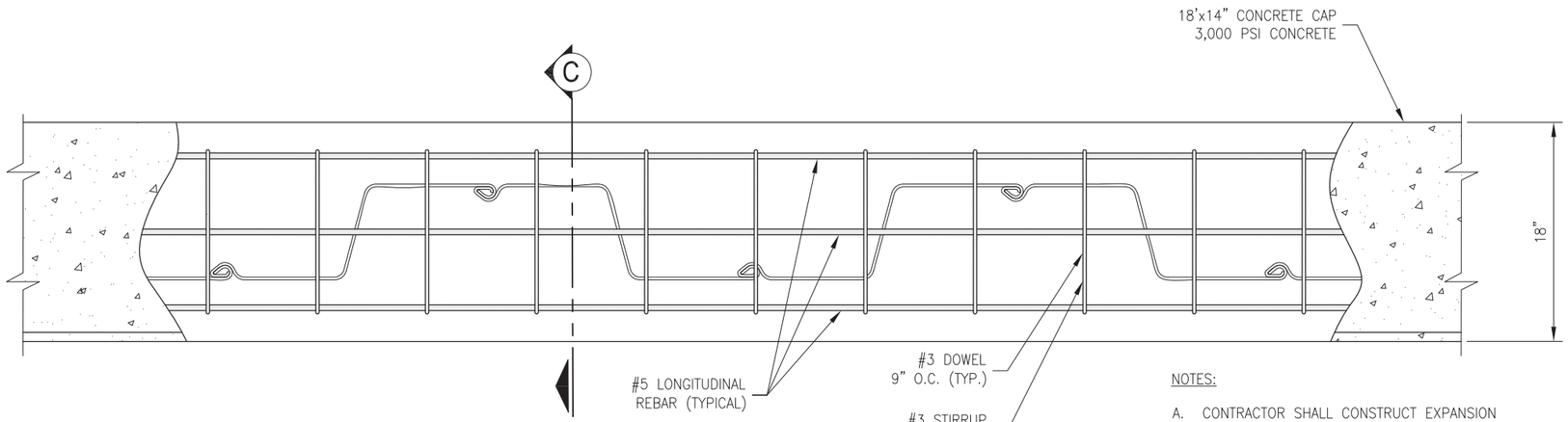


PLAN VIEW

NOTES:

A. CONTRACTOR SHALL CONSTRUCT EXPANSION JOINTS EVERY 60 LF AND CONTRACTION JOINTS EVERY 12 LF.

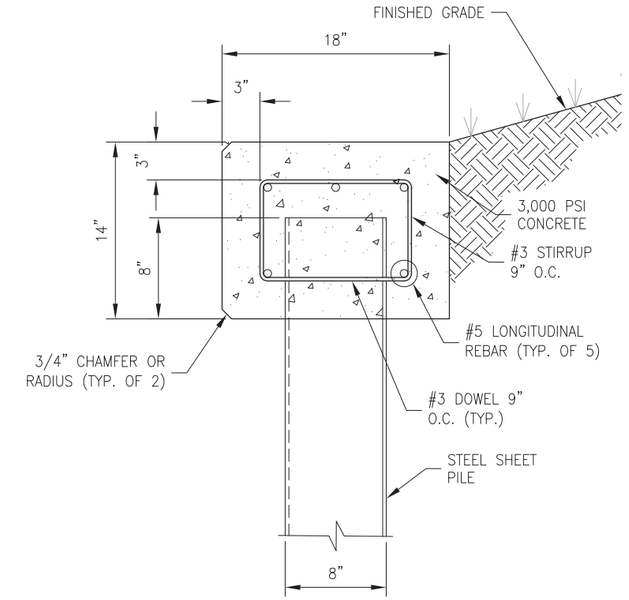


SECTION 'C-C'

## DETAIL - CONCRETE PILE CAP

SCALE: 1"=1'-0"

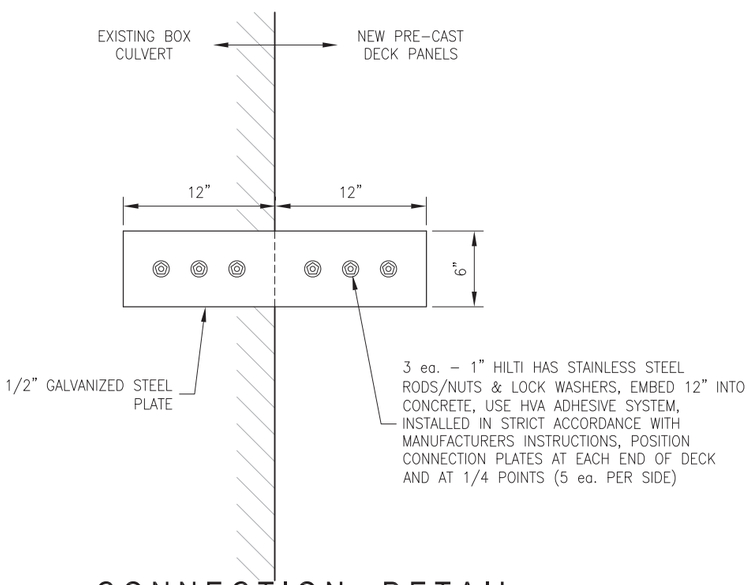


## CONNECTION DETAIL

SCALE: 1"=1'-0"

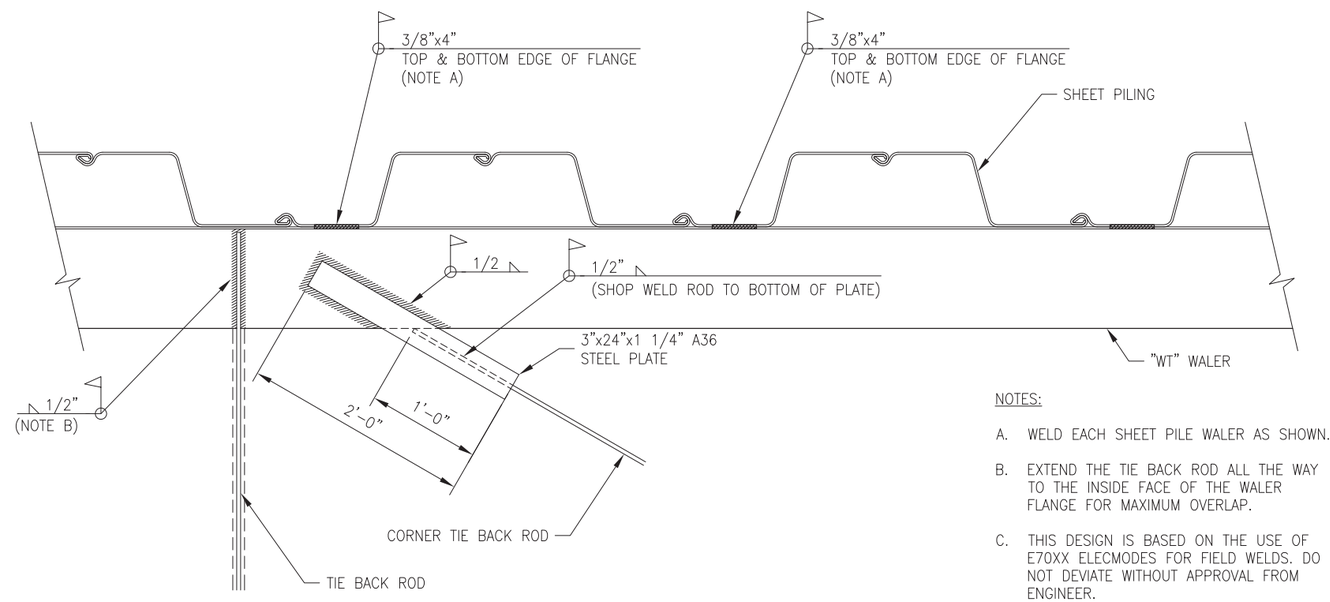


NOTES:

A. WELD EACH SHEET PILE WALER AS SHOWN.

B. EXTEND THE TIE BACK ROD ALL THE WAY TO THE INSIDE FACE OF THE WALER FLANGE FOR MAXIMUM OVERLAP.

C. THIS DESIGN IS BASED ON THE USE OF E70XX ELECMODES FOR FIELD WELDS. DO NOT DEVIATE WITHOUT APPROVAL FROM ENGINEER.

## TIE BACK WELD DETAILS

SCALE: 3/4"=1'-0"

PREBLE-RISH, INC. ALL RIGHTS RESERVED. NO PART OF THIS DOCUMENT MAY BE REPRODUCED OR UTILIZED IN ANY FORM WITHOUT PRIOR WRITTEN AUTHORIZATION OF PREBLE-RISH, INC.

EB# 0006155

| NO. | DATE: | APPR. | REVISION: |
|---|---|---|---|
| | | | |
| | | | |
| | | | |
| | | | |
| | | | |

SURF ROAD NRCS
STRUCTURAL DETAILS

PREBLE-RISH INC
CONSULTING ENGINEERS AND SURVEYORS
CIVIL • SURVEYING • SITE PLANNING
36 JASPER THOMAS ROAD, CRAWFORDVILLE, FL 32327

WAKULLA COUNTY
BOARD OF COUNTY COMMISSIONERS
WAKULLA COUNTY, FLORIDA

| | |
|---|---|
| DATE: JAN. 2014 | PROJECT NO. 203.108 |
| SCALE: AS NOTED | |
| DRAWN: L. EVERS | SHEET S4 |
| CHECKED: | |

January 23, 2014 (12:37:16 EST)
K:\203.108 SURF ROAD NRCS\CIVIL3DFOLDER_PRODUCTION\STRUCTURAL DETAILS (SURF ROAD).DWG

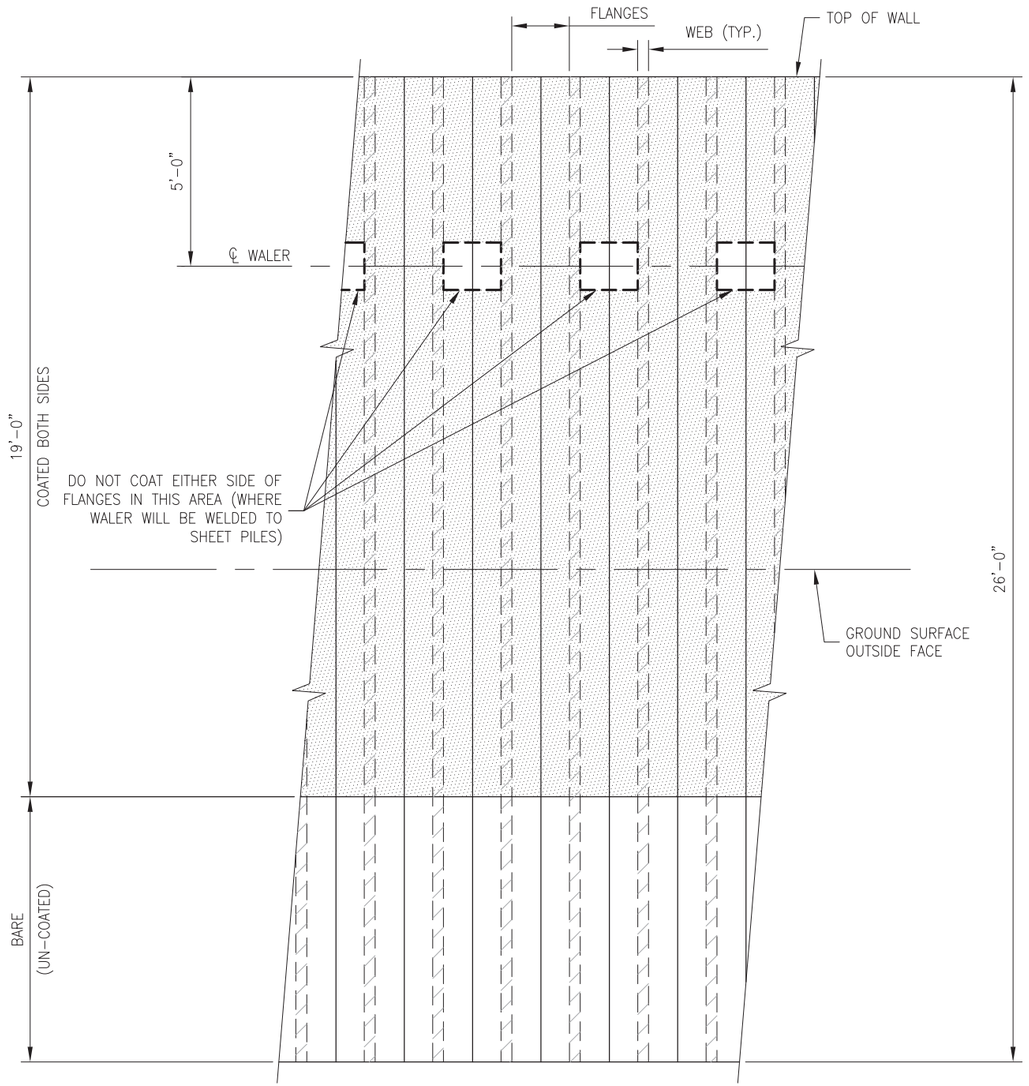


ELEVATION
SCALE: 1/4"=1'-0"

COATING; 12 – 14 MILLS (DFT) POLY EUREA OR EPOXY COAL TAR.

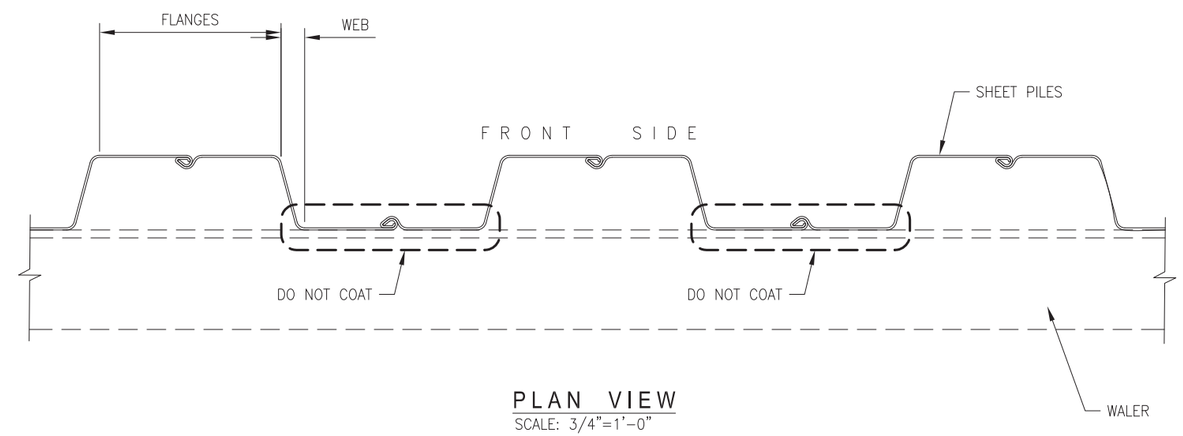


PLAN VIEW
SCALE: 3/4"=1'-0"

# SHEET PILE COATING PLAN

PREBLE-RISH, INC. ALL RIGHTS RESERVED. NO PART OF THIS DOCUMENT MAY BE REPRODUCED OR UTILIZED IN ANY FORM WITHOUT PRIOR WRITTEN AUTHORIZATION OF PREBLE-RISH, INC.

EB# 0006155

| NO. | DATE: | APPR. | REVISION: |
|---|---|---|---|
| | | | |
| | | | |
| | | | |
| | | | |
| | | | |

SURF ROAD NRCS
STRUCTURAL DETAILS

PREBLE-RISH INC
CONSULTING ENGINEERS AND SURVEYORS
CIVIL • SURVEYING • SITE PLANNING
36 JASPER THOMAS ROAD, CRAWFORDVILLE, FL 32327

WAKULLA COUNTY
BOARD OF COUNTY COMMISSIONERS
WAKULLA COUNTY, FLORIDA

| | |
|---|---|
| DATE: JAN. 2014 | PROJECT NO. 203.108 |
| SCALE: AS NOTED | |
| DRAWN: L. EVERS | SHEET S5 |
| CHECKED: | |

January 23, 2014 (12:37:16 EST)
K:\203.108 SURF ROAD NRCS\CIVIL3DFOLDER_PRODUCTION\STRUCTURAL DETAILS (SURF ROAD).DWG